LE GOUVERNEMENT
DU GRAND-DUCHÉ DE LUXEMBOURG
Ministère de la Mobilité
et des Travaux publics

Département de la mobilité
et des transports

SOCIÉTÉ NATIONALE DE
CERTIFICATION ET D'HOMOLOGATION
S.A.

Registre de Commerce: B 27180

L-8070 Bertrange

Référence: e13*168/2013*01827*00

Annexes: - Rapport technique
- Fiche de renseignements du constructeur

Bertrange, le 31 août 2023

FICHE DE RÉCEPTION UE PAR TYPE D'UN VÉHICULE ENTIER

EU WHOLE-VEHICLE TYPE-APPROVAL CERTIFICATE

Communication concernant:
Communication concerning:

- **la réception UE par type d'un véhicule entier**
  EU whole-vehicle type-approval
- ~~**l'extension de la réception UE par type d'un véhicule entier**~~
  ~~extension of EU whole-vehicle type-approval~~
- ~~**le refus de la réception UE par type d'un véhicule entier**~~
  ~~refusal of EU whole-vehicle type-approval~~
- ~~**le retrait de la réception UE par type d'un véhicule entier**~~
  ~~withdrawal of EU whole-vehicle type-approval~~

pour un type de véhicule complet
of a complete vehicle type

en vertu du règlement (UE) N° 168/2013,
modifié en dernier lieu par le règlement (délégué de la Commission) (UE) N° 2020/1694
complété par les règlements (UE) N° 3/2014, N° 44/2014 et N° 134/2014 modifiés en dernier lieu par le règlement (UE) N° 2018/295
with regard to Regulation (EU) N° 168/2013, as last amended by (Commission Delegated) Regulation (EU) N° 2020/1694
supplemented by regulations (EU) N° 3/2014, N° 44/2014 and N° 134/2014 as last amended by regulation (EU) N° 2018/295

Numéro de réception UE par type:
EU type-approval number: e13*168/2013*01827*00

Raison de l'extension:
Reason for extension: not applicable

SECTION I
SECTION I

0.1.	**Marque (dénomination commerciale du constructeur):** Make (trade name of manufacturer):	KAMAX (logo refer to manufacturer's information document)
0.2.	**Type:** Type:	Cub pro 125
0.2.1.	**Variante(s):** Variant(s):	0
0.2.2.	**Version(s):** Version(s):	1, 2
0.2.3.	**Appellation(s) commerciale(s) (le cas échéant):** Commercial name(s) (if available):	SUPER CUB, SUPER CUB 125, T125, C125, DM125, CUB PRO, CUB PRO 125
0.3.	**Catégorie, sous-catégorie et sous-sous-catégorie du véhicule:** Category, subcategory and sub-subcategory of vehicle:	L3e-A1
0.4.	**Raison sociale et adresse du constructeur du véhicule complet:** Company name and address of manufacturer of the complete vehicle:	Kamax Group Limited Unit 917A 9/F Tower A New Mandarin Plaza No 14 Science Museum Road Tsimshatsui Kowloon, Hong Kong
0.4.1	**Nom(s) et adresse(s) de(s) usines d'assemblage:** Name(s) and addresse(s) of assembly plant(s):	Chongqing Dalongyufeng Motorcycle Manufacturing Co., Ltd. No.100th, Qianqiu Avenue, Wan'gu town, Dazu District, Chongqing City, China
0.4.2.	**Nom et adresse du mandataire du constructeur (le cas échéant):** Name and address of manufacturer's authorised representative, if any:	Kamax Europe Gmbh Talhof 1,88709 Hagnau am Bodensee, Germany

SECTION II
SECTION II

1.	**Service technique responsable de la réalisation des essais:** Technical service responsible for carrying out the tests:	TÜV Rheinland Luxemburg S.à r.l. 2-4, rue Edmond Reuter L-5326 Contern
2.	**Date du rapport d'essais:** Date of test report:	31.07.2023
3.	**Numéro du rapport d'essais:** Number of test report:	89-168/2013-959/23-00

SECTION III

SECTION III

Le soussigné certifie l'exactitude de la description, faite par le constructeur dans la fiche de renseignements jointe, du type de véhicule décrit ci-dessus, dont un ou plusieurs échantillons représentatifs, sélectionnés par l'autorité compétente en matière de réception UE par type, ont été présentés en tant que prototypes du type de véhicule, et que les résultats d'essais joints s'appliquent au type de véhicule.

The undersigned hereby certifies the accuracy of the manufacturer's description in the attached information document of the vehicle type described above, for which one or more representative samples, selected by the EU type-approval authority, have been submitted as prototypes of the vehicle type and that the attached test results apply to the vehicle type.

1.	**Le type de véhicule complet satisfait/ ~~ne satisfait pas~~ à l'ensemble des prescriptions pertinentes énumérées dans l'annexe II du règlement (UE) N° 168/2013.** The complete vehicle type meets/~~does not meet~~ all relevant requirements as listed in Annex II to Regulation (EU) N° 168/2013	The complete vehicle type meets all relevant requirements as listed in Annex II to Regulation (EU) N° 168/2013
1.1.	**Restrictions de validité:** Restrictions of validity:	not applicable
1.2.	**Dérogations accordées:** Waivers applied:	not applicable
1.2.1.	**Raisons des dérogations:** Reasons for the waivers:	not applicable
1.2.2.	**Autres exigences applicables:** Alternative requirements:	not applicable
2.	**La réception est accordée/~~étendue/refusée/ retirée~~:** The approval is granted/~~extended/refused/withdrawn~~	the approval is granted
2.1.	**La réception est accordée conformément à l'article 40 du règlement (UE) no 168/2013 et sa validité expire, par conséquent, le jj/mm/aaaa.** The approval is granted in accordance with Article 40 of Regulation (EU) No 168/2013 and the validity of the approval is thus limited to dd/mm/yyyy.	not applicable

Lieu:
Place: Bertrange

Date:
Date: 31 août 2023

Signature:
Signature:

Pour le Ministre de la Mobilité et des Travaux publics

Pol PHILIPPE
Attaché

Pour la SNCH

Laurent LINDEN
Directeur opérationnel

Pièces jointes:
Attachments:

- **Dossier de réception**
  Information package
- **Résultats d'essai**
  Test results
- **Nom(s) et spécimen(s) de signature de la ou des personnes autorisées à signer les certificats de conformité et indication de leurs fonctions dans la société**
  Name(s) and specimen(s) of the signature(s) of the person(s) authorised to sign certificates of conformity and a statement of their position in the company
- **Spécimen complété du certificat de conformité**
  A completed specimen of the certificate of conformity

NB:
NB: not applicable

Addendum à la fiche de réception UE par type

Addendum to the EU type-approval certificate

Liste des actes réglementaires aux prescriptions desquels le type de véhicule satisfait

List of regulatory acts with which the type of vehicle complies

refer to Appendix 1 - Page 10 to 14 of test report N° 89-168/2013-959/23-00

LE GOUVERNEMENT
DU GRAND-DUCHÉ DE LUXEMBOURG
Ministère de la Mobilité
et des Travaux publics

Département de la mobilité
et des transports

SOCIÉTÉ NATIONALE DE
CERTIFICATION ET D'HOMOLOGATION
S.A.

Registre de Commerce: B 27180

L-8070 Bertrange

Référence: e13*168/2013*01827*00

Annexes: - Rapport technique
- Fiche de renseignements du constructeur

Bertrange, le 31 août 2023

Index du dossier de réception

Index to type-approval report

	Numéro de réception UE par type: EU type-approval number:	e13*168/2013*01827*00
	Révision: Revision:	00
	Marque de fabrique ou de commerce: Trade name or mark:	KAMAX (logo refer to manufacturer's information document)
	Type: Type:	Cub pro 125
1.	**Procès-verbal d'essai:** Test report:	N° 89-168/2013-959/23-00
	- Test report:	Page 1 to 7;
	- Technical information:	Appendix L - Page 8 & 9;
	- List of modifications:	Appendix 0 - Page 10;
	- Addendum to the EU type approval certificate:	Appendix 1 - Page 11 to 14;
	- Information of test reports by subject:	Appendix 2 - Page 15 to 33;
	- Test minutes braking system:	Appendix 3 - Page 34 to 39;
	- Test minutes audible warning device:	Appendix 4 - Page 40;
	- Test minutes lighting installation:	Appendix 5 - Page 41;
	- Test minutes max. engine power and torque:	Appendix 6 - Page 42 to 45;
	- Test minutes tyre installation:	Appendix 7 - Page 46 & 47;
	- Test minutes electromagnetic compatibility:	Appendix 8 - Page 48 to 51;
	- Test minutes noise measurement:	Appendix 9 - Page 52 to 55;
	- Test minutes speedometer:	Appendix 10 - Page 56 & 57;
	- Test minutes fuel tank:	Appendix 11 - Page 58;
	- Test minutes passenger handholds and footrests:	Appendix 12 - Page 59;
	- Test minutes steer-ability:	Appendix 13 - Page 60;
	- Test minutes external projections:	Appendix 14 - Page 61;
	- Test minutes masses and dimensions:	Appendix 15 - Page 62;
	- Test minutes of Stands:	Appendix 16 -Page 63;
	- Test minutes of rear-view mirror(s) installation measuring:	Appendix 17 -Page 64;
	- Test minutes of identification of controls, tell-tales and indicators:	Appendix 18 -Page 65;
	- Test minutes of Protection device:	Appendix 19 -Page 66.

2.	**Dossier du constructeur:**	
	Report of the manufacturer:	N° 168/2013- Cub pro 125-00
	- Information folder:	Page 1 to 18;
	- List of contents:	Page 1 & 2;
	- Technical description of the vehicle type and its components:	refer to list of contents.
3.	**Autres documents annexés:**	
	Other documents annexed:	not applicable
4.	**Date de délivrance de la réception initiale:**	
	Date of issue of initial type approval:	31.08.2023
5.	**Date de la dernière délivrance de Page révisées:**	
	Date of last issue of revised Page:	not applicable
6.	**Date de la dernière délivrance d'une réception révisée:**	
	Date of last extension:	not applicable

LE GOUVERNEMENT
DU GRAND-DUCHÉ DE LUXEMBOURG
Ministère de la Mobilité
et des Travaux publics

Département de la mobilité
et des transports

SOCIÉTÉ NATIONALE DE
CERTIFICATION ET D'HOMOLOGATION
S.A.

Registre de Commerce: B 27180

L-8070 Bertrange

Référence: e13*168/2013*01827*00

Annexes: - Rapport Technique
- Fiche de Renseignements du constructeur

Bertrange, le 31 août 2023

Annexe VIII
Annex VIII

Fiche des résultats d'essais
Test results sheet

refer to Appendix 2 - Page 15 to 33 of test report N° 89-168/2013-959/23-00

Vehicle type : Cub pro 125
Manufacturer : Kamax Group Limited

TEST REPORT

According to Council Directive on the approximation of
the laws of the Member States relating to the

Approval and market surveillance
of two or three-wheel vehicles and quadricycles

Regulation (EU) No 168/2013 as last amended by Regulation (EU) No 2020/1694

Including all amendments

Commission implementing Regulation (EU) No 901/2014 as last amended by (EU) 2020/239
Commission Delegated Regulation (EU) No 134/2014 as last amended by (EU) 2018/295
Commission Delegated Regulation (EU) No 44/2014 as last amended by (EU) 2018/295
Commission Delegated Regulation (EU) No 3/2014 as last amended by (EU) 2016/1824

Previously granted	
EU type – approval	: e13*168/2013*01827*00 (reserved)

e13*168/2013*01827*00
Société Nationale de Certification et d'Homologation

Structure of the Test Report:

0. General information
1. Tested vehicle(s)
2. Test record
3. List of appendices
4. Statement of conformity

The Test Report shall be reproduced and published only in its entirety by the client. It may however be reproduced and published partially, but only with the written permission of the Technical Service.

Vehicle type : Cub pro 125
Manufacturer : Kamax Group Limited

0. General information

0.1.	Make (trade name of the manufacturer)	: KAMAX
0.2.	Type	: Cub pro 125
0.3.	Category, subcategory of vehicle	: L3e-A1
0.4.	Name and address of the manufacturer	: Kamax Group Limited Unit 917A 9/F Tower A New Mandarin Plaza No 14 Science Museum Road Tsimshatsui Kowloon, Hong Kong
0.5.	No. of the information document -Date of issue -Date of last change	: 168/2013-Cub pro 125-00 : February 20, 2023 : --

Vehicle type : Cub pro 125
Manufacturer : Kamax Group Limited

1. Tested vehicle(s)

e13*168/2013*01827*00
Société Nationale de Certification et d'Homologation

1.1. Description

1.1.1	Vehicle	: Lower-performance motorcycle
	Commercial description	: SUPER CUB, SUPER CUB 125, T125, C125, DM125, CUB PRO, CUB PRO 125
	Type / variant(s) / version(s)	: Cub pro 125 / 0/ 1, 2
	Identification number	: R71XCJL12P4001003 Engine no.: 153FMI*1P004569*
1.1.2	Condition of vehicle(s)	: New, ~~used, pretested~~
1.2.	Worst case selection	: There is no worst case selection applicable because all versions mentioned in the information folder are tested.
1.3.	Remarks	: The difference between Version 1 and Version 2 is that the former is a single saddle, while the other is a dual saddle. In addition, version 1 can be equipped with optional loading rack

2. Test record

e13*168/2013*01827*00
Société Nationale de Certification et d'Homologation

2.1.	Equipment for measuring and testing	: The test facilities / measurement equipment used were in compliance with the test requirements.
2.1.1	Specifications for the test site	: Refer to the relevant Appendices
2.1.2	Subcontracting	: Not applicable
2.2.	Test results	: See Appendix 2
	Remarks concerning extension	: ~~The vehicle type has been tested according to the modification(s) mentioned in appendix 0.~~ ~~The new parts meet the requirements of the Regulations.~~ ~~An actual practical test of the vehicle was not necessary. The results of the previous test(s) are still valid.~~
2.2.1	Measurements	: All measurement results are listed and referred to the respective limit(s) with judgment.
2.2.2	Alternative test provisions	: Not applicable
2.2.3	Attributive tests	: Not applicable
2.3.	Additional information	: The results of the test refer exclusively to the object(s) mentioned under point 1.1. of this report.

	Test site	: China Automotive Engineering Research Institute Co., Ltd. No. 9, Jinyu Avenue, Liangjiang New Area, Chongqing Chongqing LONCIN Motor Co., LTD. Baihe Industrial Park, Economic & Technology Development Zone, Chongqing China National Motorcycle Quality Supervisory &Testing Center (Tianjin) Tianjin, P.R.China Chongqing Yingang Science & Technology (Group) Co., Ltd. NO.71 Tongxing nan Road, Beibei District, Chongqing, China
	Test date	: May 25, 2023 to July 28, 2023
2.4.	Remarks	: --

e13*168/2013*01827*00
Société Nationale de Certification et d'Homologation

3. List of Appendices

e13*168/2013*01827*00
Société Nationale de Certification et d'Homologation

L	**Technical information**	:	Pages 8 & 9
0	**List of modifications**	:	Page 10
1	**Addendum to the EU type-approval certificate**	:	Pages 11 to 14
2	**Minimum information of the test reports by subject**	:	Pages 15 to 33
3	**Test minutes of braking system**	:	Pages 34 to 39
4	**Test minutes of audible warning device**	:	Page 40
5	**Test minutes of lighting installation**	:	Page 41
6	**Test minutes of maximum engine power and torque**	:	Pages 42 to 45
7	**Test minutes of tyre installation**	:	Pages 46 & 47
8	**Test minutes of EMC**	:	Pages 48 to 51
9	**Test minutes of noise measuring**	:	Pages 52 to 55
10	**Test minutes of speedometer measuring**	:	Pages 56 & 57
11	**Test minutes of fuel tank**	:	Page 58
12	**Test minutes of passenger handholds and footrests**	:	Page 59
13	**Test minutes of steer-ability**	:	Page 60
14	**Test minutes of external projection**	:	Page 61
15	**Test minutes of mass and dimension**	:	Page 62
16	**Test minutes of Stands**	:	Page 63
17	**Test minutes of rear-view mirror(s) installation measuring**	:	Page 64
18	**Test minutes of identification of controls, tell-tales and indicators**	:	Page 65
19	**Test minutes of Protection device**	:	Page 66
	Information document no. (Excluding drawings)	:	168/2013-Cub pro 125-00

e13*168/2013*01827*00
Société Nationale de Certification et d'Homologation

4. Statement of conformity

The Information Document listed in section 0.5., and the type described therein, comply with the requirements stated on page 1. The test results in this report refer to the vehicle(s)/~~object(s)~~ described under section 1.1. With regards to the required level of performance to be achieved, the tested samples were representative for the type to be approved (see section 1.2).

Engineering Center, Shanghai, July 31, 2023

MSC /EW

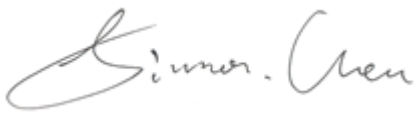

Simon Chen
Technical Expert Technical Service

Vehicle type : Cub pro 125
Manufacturer : Kamax Group Limited

Technical information about the vehicle type according to the Type-Approval Form of Annex VI of the Communication concerning EU type approval — Appendix L

SECTION I

0.1.	Make (trade name of manufacturer)	:	KAMAX
0.2.	Type (2)	:	Cub pro 125
0.2.1.	Variant(s) (2)	:	0
0.2.2.	Version(s) (2)	:	1, 2
0.2.3.	Commercial name(s) (if available)	:	SUPER CUB, SUPER CUB 125, T125, C125, DM125, CUB PRO, CUB PRO 125
0.3.	Category, subcategory and sub-subcategory of vehicle	:	L3e-A1
0.4.	Company name and address of manufacturer of the complete vehicle	:	Kamax Group Limited Unit 917A 9/F Tower A New Mandarin Plaza No 14 Science Museum Road Tsimshatsui Kowloon, Hong Kong
0.4.1.	Name(s) and address(es) of assembly plants	:	Chongqing Dalongyufeng Motorcycle Manufacturing Co., Ltd. No.100th, Qianqiu Avenue, Wan'gu town, Dazu District, Chongqing City, China
0.4.2.	Name and address of manufacturer's authorised representative, if any	:	Kamax Europe Gmbh Talhof 1,88709 Hagnau am Bodensee, Germany

Vehicle type : Cub pro 125
Manufacturer : Kamax Group Limited

SECTION II

1.	Technical service responsible for carrying out the tests	:	TÜV Rheinland Luxemburg S.à r.l. 2-4, rue Edmond Reuter L-5326 Contern
2.	Date of test report	:	July 31, 2023
3.	Number of test report	:	89-168/2013-959/23-00

SECTION III

The undersigned hereby certifies the accuracy of the manufacturer's description in the attached information document of the vehicle type described above, for which one or more representative samples, selected by the EU type-approval authority, have been submitted as prototypes of the vehicle type and that the attached test results apply to the vehicle type.

1.	The complete vehicle type meets / ~~does not meet~~ (1) all relevant requirements as listed in Annex II to Regulation (EU) No 168/2013.		
1.1.	Restrictions of validity (1) (6)	:	Not applicable
1.2.	Waivers applied (1) (6) (7)	:	Not applicable
1.2.1.	Reasons for the waivers (1) (7)	:	Not applicable
1.2.2.	Alternative requirements (1) (7)	:	Not applicable

Vehicle type : Cub pro 125
Manufacturer : Kamax Group Limited

List of modifications

Appendix 0

Correction of : --

Modification of : --

Addition of : --

Deletion of : --

e13*168/2013*01827*00
Société Nationale de Certification et d'Homologation

Vehicle type : Cub pro 125
Manufacturer : Kamax Group Limited

Addendum to the EU type-approval certificate — Appendix 1

item	Subject	Regulatory act reference	As amended by	ECE test procedure	ECE approval number	Variant / version	Compliance	Remark
ENVIRONMENTAL AND PROPULSION UNIT PERFORMANCE REQUIREMENTS (EPPR)								
1	Tailpipe emissions after cold start	Commission Delegated Regulation (EU) No 134/2014 Annex II	Commission Delegated Regulation (EU) No 2018/295	N.A.	N.A.	all	Comply	--
2	Tailpipe emissions at (increased) idle/ free acceleration	Commission Delegated Regulation (EU) No 134/2014 Annex III	Commission Delegated Regulation (EU) No 2018/295	N.A.	N.A.	all	Comply	--
3	Emissions crankcase gases	Commission Delegated Regulation (EU) No 134/2014 Annex IV	Commission Delegated Regulation (EU) No 2018/295	N.A.	N.A.	all	Comply	--
4	Evaporative emissions	Commission Delegated Regulation (EU) No 134/2014 Annex V	Commission Delegated Regulation (EU) No 2018/295	N.A.	N.A.	all	Comply	--
5	Durability of pollution-control devices	Commission Delegated Regulation (EU) No 134/2014 Annex VI	Commission Delegated Regulation (EU) No 2018/295	N.A.	N.A.	all	Comply	--
6	CO_2 emissions, fuel consumption, electric energy consumption and electric range	Commission Delegated Regulation (EU) No 134/2014 Annex VII	Commission Delegated Regulation (EU) No 2018/295	N.A.	N.A.	all	Comply	--
7	OBD Environmental tests	Commission Delegated Regulation (EU) No 134/2014 Annex VIII	Commission Delegated Regulation (EU) No 2018/295	N.A.	N.A.	all	Comply	--
8	Sound level	Commission Delegated Regulation (EU) No 134/2014 Annex IX	Commission Delegated Regulation (EU) No 2018/295	R41-04	N.A.	all	Comply	--
9	Procedures and technical requirements on maximum vehicle design speed, maximum torque, maximum continuous total power and maximum peak power	Commission Delegated Regulation (EU) No 134/2014 Annex X	Commission Delegated Regulation (EU) No 2018/295	N.A.	N.A.	all	Comply	--
10	Vehicle propulsion family definition	Commission Delegated Regulation (EU) No 134/2014 Annex XI	Commission Delegated Regulation (EU) No 2018/295	N.A.	N.A.	N.A.	N.A.	--

e13*168/2013*01827*00
Société Nationale de Certification et d'Homologation

Vehicle type : Cub pro 125
Manufacturer : Kamax Group Limited

VEHICLE FUNCTIONAL SAFETY REQUIREMENTS (VFSR)								
1	Audible warning devices	Commission Delegated Regulation (EU) No 3/2014 Annex II	Commission Delegated Regulation (EU) No 2016/1824	R28-00	N.A.	all	Comply	--
2	Braking, including anti-lock and combined brake systems	Commission Delegated Regulation (EU) No 3/2014 Annex III	Commission Delegated Regulation (EU) No 2016/1824	R78-05	N.A.	all	Comply	--
3	Electrical safety	Commission Delegated Regulation (EU) No 3/2014 Annex IV	Commission Delegated Regulation (EU) No 2016/1824	N.A.	N.A.	N.A.	N.A.	--
4	Manufacturer declaration requirements regarding endurance testing of functional safety-critical systems, parts and equipment	Commission Delegated Regulation (EU) No 3/2014 Annex V	Commission Delegated Regulation (EU) No 2016/1824	N.A.	N.A.	all	Comply	--
5	Front and rear protective structures	Commission Delegated Regulation (EU) No 3/2014 Annex VI	Commission Delegated Regulation (EU) No 2016/1824	N.A.	N.A.	N.A.	N.A.	--
6	Glazing, windscreen wipers and washers, and defrosting and demisting systems	Commission Delegated Regulation (EU) No 3/2014 Annex VII	Commission Delegated Regulation (EU) No 2016/1824	N.A.	N.A.	N.A.	N.A.	--
7	Driver-operated controls including identification of controls, tell-tales and indicators	Commission Delegated Regulation (EU) No 3/2014 Annex VIII	Commission Delegated Regulation (EU) No 2016/1824	R60-00	N.A.	all	Comply	--
8	Installation of lighting and light- signalling devices, including automatic switching of lighting	Commission Delegated Regulation (EU) No 3/2014 Annex IX	Commission Delegated Regulation (EU) No 2016/1824	R53-03	N.A.	all	Comply	--
9	Rearward visibility	Commission Delegated Regulation (EU) No 3/2014 Annex X	Commission Delegated Regulation (EU) No 2016/1824	R81-00	N.A.	all	Comply	--
10	Rollover protective structure (ROPS)	Commission Delegated Regulation (EU) No 3/2014 Annex XI	Commission Delegated Regulation (EU) No 2016/1824	N.A.	N.A.	N.A.	N.A.	--
11	Safety-belt anchorages and safety- belts	Commission Delegated Regulation (EU) No 3/2014 Annex XII	Commission Delegated Regulation (EU) No 2016/1824	N.A.	N.A.	N.A.	N.A.	--
12	Seating positions (saddles and seats)	Commission Delegated Regulation (EU) No 3/2014 Annex XIII	Commission Delegated Regulation (EU) No 2016/1824	N.A.	N.A.	all	Comply	--

13	Steer-ability, cornering properties and turn-ability	Commission Delegated Regulation (EU) No 3/2014 Annex XIV	Commission Delegated Regulation (EU) No 2016/1824	N.A.	N.A.	all	Comply	--
14	Installation of tyres	Commission Delegated Regulation (EU) No 3/2014 Annex XV	Commission Delegated Regulation (EU) No 2016/1824	N.A.	N.A.	all	Comply	--
15	Vehicle maximum speed limitation plate and its location on the vehicle	Commission Delegated Regulation (EU) No 3/2014 Annex XVI	Commission Delegated Regulation (EU) No 2016/1824	N.A.	N.A.	N.A.	N.A.	--
16	Vehicle occupant protection, including interior fittings and vehicle doors	Commission Delegated Regulation (EU) No 3/2014 Annex XVII	Commission Delegated Regulation (EU) No 2016/1824	N.A.	N.A.	N.A.	N.A.	--
17	Maximum continuous total power and/or maximum vehicle speed limitation by design	Commission Delegated Regulation (EU) No 3/2014 Annex XVIII	Commission Delegated Regulation (EU) No 2016/1824	N.A.	N.A.	all	Comply	--
18	Requirements on vehicle structure integrity	Commission Delegated Regulation (EU) No 3/2014 Annex XIX	Commission Delegated Regulation (EU) No 2016/1824	N.A.	N.A.	all	Comply	--

e13*168/2013*01827*00
Société Nationale de Certification et d'Homologation

Vehicle type : Cub pro 125
Manufacturer : Kamax Group Limited

VEHICLE CONSTRUCTION AND GENERAL TYPE-APPROVAL REQUIREMENTS (VCR)								
1	Powertrain tampering prevention measures (anti-tampering)	Commission Delegated Regulation (EU) No 44/2014 Annex II	Commission Delegated Regulation (EU) No 2018/295	N.A.	N.A.	all	Comply	--
2	Arrangements for type-approval procedures	Commission Delegated Regulation (EU) No 44/2014 Annex III	Commission Delegated Regulation (EU) No 2018/295	N.A.	N.A.	all	Comply	--
3	Conformity of production	Commission Delegated Regulation (EU) No 44/2014 Annex IV	Commission Delegated Regulation (EU) No 2018/295	N.A.	N.A.	all	Comply	--
4	Coupling devices and attachments	Commission Delegated Regulation (EU) No 44/2014 Annex V	Commission Delegated Regulation (EU) No 2018/295	N.A.	N.A.	N.A.	N.A.	--
5	Devices to prevent unauthorised use	Commission Delegated Regulation (EU) No 44/2014 Annex VI	Commission Delegated Regulation (EU) No 2018/295	R62-01	N.A.	all	Comply	--
6	Electromagnetic compatibility (EMC)	Commission Delegated Regulation (EU) No 44/2014 Annex VII	Commission Delegated Regulation (EU) No 2018/295	R10-06	N.A.	all	Comply	--
7	External projections	Commission Delegated Regulation (EU) No 44/2014 Annex VIII	Commission Delegated Regulation (EU) No 2018/295	N.A.	N.A.	all	Comply	--
8	Fuel storage	Commission Delegated Regulation (EU) No 44/2014 Annex IX	Commission Delegated Regulation (EU) No 2018/295	N.A.	N.A.	all	Comply	--
9	Load platforms	Commission Delegated Regulation (EU) No 44/2014 Annex X	Commission Delegated Regulation (EU) No 2018/295	N.A.	N.A.	N.A.	N.A.	--
10	Masses and dimensions	Commission Delegated Regulation (EU) No 44/2014 Annex XI	Commission Delegated Regulation (EU) No 2018/295	N.A.	N.A.	all	Comply	--
11	On-board diagnostics (OBD) functional requirements	Commission Delegated Regulation (EU) No 44/2014 Annex XII	Commission Delegated Regulation (EU) No 2018/295	N.A.	N.A.	all	Comply	--
12	Passenger handholds and footrests	Commission Delegated Regulation (EU) No 44/2014 Annex XIII	Commission Delegated Regulation (EU) No 2018/295	N.A.	N.A.	all	Comply	--
13	Registration plate space	Commission Delegated Regulation (EU) No 44/2014 Annex XIV	Commission Delegated Regulation (EU) No 2018/295	N.A.	N.A.	all	Comply	--
14	Access to repair and maintenance information	Commission Delegated Regulation (EU) No 44/2014 Annex XV	Commission Delegated Regulation (EU) No 2018/295	N.A.	N.A.	all	Comply	--
15	Stands	Commission Delegated Regulation (EU) No 44/2014 Annex XVI	Commission Delegated Regulation (EU) No 2018/295	N.A.	N.A.	all	Comply	--

e13*168/2013*01827*00
Société Nationale de Certification et d'Homologation

Vehicle type : Cub pro 125
Manufacturer : Kamax Group Limited

Minimum information of the test reports by subject — Appendix 2

2.2.1.	(A) Environmental and propulsion unit performance	
2.2.1.1.	Generic information on environmental performance	: See below
	The test report shall contain the following generic test data (only needed once per test type)	
2.2.1.1.1.	Description of propulsion, propulsion family and drive-train of test vehicle(s)	: See information document
2.2.1.1.2.	Environmental step of test vehicle: Euro 3, Euro 4, Euro 5, Euro 5+	: Euro 5
2.2.1.1.3.	Description of emission test bench(es), specifications and settings	: HORIBA MEXA-7400D; 4244065001
2.2.1.1.4.	Chassis/engine dynamometer(s) specifications	: Make : TIANBO Type : QC100-30 Serial number: 111205
	e13*168/2013*01827*00 Société Nationale de Certification et d'Homologation	
2.2.1.1.5.	Inertia (reference) mass and running resistance settings for single/~~dual~~ roll chassis dynamometer	
	- Equivalent inertia mass - Rolling resistance of front wheel - Aerodynamic drag coefficient	: 180 kg : 15.8 N : 0.0227 N/(km/h)^2
2.2.1.1.6.	Comprehensive report of road test results for the determination of test bench settings, including coast down times for single/~~dual~~ roll chassis dynamometer	: Not applicable
2.2.1.1.7.	Applicable test type I driving schedule (ECE R40 (with/without EUDC), ECE R47, WMTC stage 1, WMTC stage 2, revised WMTC)	: revised WMTC
2.2.1.1.8.	Description gearshift prescriptions for environmental testing	: Not applicable
2.2.1.2.	Test type I: requirements: tailpipe emissions after cold start The following items specific to test type I shall be provided	

2.2.1.2.1.	Description of tested vehicle(s) (prototype(s) or series production, hardware and software levels, VIN) e13*168/2013*01827*00 Société Nationale de Certification et d'Homologation	: R71XCJL12P4001003 software ID: CUB_PRO_T125 calibration ID: ED110951
2.2.1.2.2.	Any deviations by test vehicle(s) from data provided in information document, Annex I: yes/no. If yes, please provide list with deviations	: ~~Yes~~/no
2.2.1.2.3.	Type-approval number if not parent vehicle	: Not applicable
2.2.1.2.4.	Mileage(s) of test vehicle(s)	: ≥2500 km
2.2.1.2.5.	Test fuel(s) used	: E5 gasoline specified in accordance with Appendix 2 of Annex II to Commission Delegated Regulation (EU) No 134/2014
2.2.1.2.6.	Description of test type I measurement methods for hybrid L-category vehicles referred to in Appendix 11 to Annex II to Commission Delegated Regulation (EU) No 134/2014	: Not applicable
2.2.1.2.7.	Description of test type I measurement methods for gas-fuelled vehicles referred to in Appendix 12 to Annex II to Commission Delegated Regulation (EU) No 134/2014	: Not applicable
2.2.1.2.8.	Description of test type I measurement methods for vehicles equipped with a periodically regenerating system referred to in Appendix 13 to Annex II to Commission Delegated Regulation (EU) No 134/2014	: Not applicable
2.2.1.2.9.	Information on regeneration strategy	: Not applicable
	D (number of operating cycles between 2 cycles when regenerative phases occur)	: Not applicable
	d (number of operating cycles required for regeneration)	: Not applicable
2.2.1.2.10.	Description of weighting of type I test results as referred to in point 6.1.1.5. of Annex II to Commission Delegated Regulation (EU) No 134/2014 including equation number and weighting factors	: According to the Table 1-10 on the 6.1.1.6.2.1. of Annex II to Commission Delegated Regulation (EU) No 134/2014

2.2.1.2.11. Number of type I operating cycles between two cycles where regenerative phases occur under the conditions equivalent to type I test (Distance 'D' in Figure Ap13-1 in Appendix 13 to Annex II to Commission Delegated Regulation (EU) No 134/2014) : Not applicable

2.2.1.2.12. Description of method employed to determine the number of cycles between two cycles where regenerative phases occur : Not applicable

2.2.1.2.13. Parameters to determine the level of loading required before regeneration occurs (i.e. temperature, pressure etc.) : Not applicable

2.2.1.2.14. Description of method used to load system in the test procedure described in point 3.1. of Appendix 13 to Annex II to Commission Delegated Regulation (EU) No 134/2014 : Not applicable

2.2.1.2.15. Test records according to point 7. of Annex II to Commission Delegated Regulation (EU) No 134/2014 : See test minute

2.2.1.2.16. Type I test results

e13*168/2013*01827*00
Société Nationale de Certification et d'Homologation

Table 5-1
Test type I results

Test Type I Test Results (TR_{TTIx})	Test No	CO	THC	NMHC	NO_X	THC + NO_X (ix)	PM
$TR_{TTI\ Measured\ x}$ (i) (iv) (mg/km)	1	219.09	46.65	41.86	24.44	71.09	--
	2	--	--	--	--	--	--
	3	--	--	--	--	--	--
$TR_{TTI\ Measured\ x\ Mean}$ (i) (iv) (mg/km)		219.09	46.65	41.86	24.44	71.09	--
K_i (i) (v) (vii) (no unit)		1	1	1	1	--	--
TR_{TTIx} (i) (vi) = $K_i \cdot TR_{TTI\ Measured\ x\ Mean}$ (mg/km) & (% of L_X)		219 & 22%	47 & 47%	42 & 62%	24 & 41%	--	--
Limit value L_X (viii) (mg/km)	Euro 5	1000	100	68	60	--	--

(i) Where applicable.
(ii) Not applicable.
(iii) Mean value calculated by adding mean values ($M \cdot K_i$) calculated for THC and NO_X.
(iv) Round to 2 decimal places.
(v) Round to 4 decimal places.
(vi) Round to 0 decimal places.
(vii) Set $K_i = 1$ in case:
(a) the vehicle is not equipped with a periodically regenerating emission abatement system or;
(b) the vehicle is not a hybrid electric vehicle.
(viii) Test limit x set out in Annex VI(A) to Regulation (EU) No 168/2013. x = 1 to 4 and refers to the numbering of the pollutant constituents in Annex VI(A), e.g. the Euro 4 limit for CO is referred to as L_1, the limit for THC is referred to as L_2, the limit for NO_X as L_3 and the limit for PM as L_4.
(ix) The individual THC and NO_X measurement values shall also be filled out in this list.

2.2.1.3. Test type II requirements: tailpipe emissions at (increased idle)/free acceleration

2.2.1.3.1. Details of test vehicle(s) if different from vehicle used for type I testing: (items 2.1.2.1.1. to 2.1.2.1.4. where different) : Not applicable

2.2.1.3.2. Description of propulsion idling activation method in case of stop-start system : Not applicable

2.2.1.3.3. Type II test results : See table below

Table 5-2
Test type II results

Test	CO (% vol.)	HC (ppm)	Lambda	Engine speed (min^{-1})	Engine oil temperature (K)	Measured & corrected value of absorption coefficient (m^{-1})
PI: Low idle test	0.01	12	1.00	1540	357	--
PI: High idle test	0.02	16	1.00	2520	357	--
CI — Free acceleration test / Smoke opacity test results	--	--	--	--	--	--

2.2.1.4. Test type III requirements: emissions of crank-case gases

2.2.1.4.1. Details of test vehicle(s) if different from vehicle used for type I testing: (items 2.1.2.1.1. to 2.1.2.1.4. where different) (8) : Not applicable

2.2.1.4.2. Type of crank-case gas recycling system (breather system, positive crank-case ventilation system, other) : Positive crank-case ventilation system

2.2.1.4.3. System for recycling crank-case gases (description and drawings) : See information document

2.2.1.4.4. Test type III performance results : Passed

2.2.1.4.5. Zero emissions from the crank-case gas system : Yes/~~no~~

2.2.1.5. Type IV test requirements: evaporative emissions

2.2.1.5.1. Evaporative emissions control system : Yes/~~no~~

2.2.1.5.2. List of 'golden components' used for evaporative emission testing complete with series, part and marking number : Not applicable

2.2.1.5.3. Fuel permeability test result : Not applicable

2.2.1.5.4. If the approved L-category vehicle complies with the evaporative emission requirements of Euro 4, the manufacturer shall indicate the SHED laboratory test type IV results TR_{TTIVST} in the table below. The SHED test results shall indicate both mg/test and % of L_{TTIVST}

2.2.1.5.5. Euro 4 evaporative emission test results : Not applicable

Table 5-3
Euro 4 SHED test type IV results

Vehicle category	SHED test limit L_{TTIVST}: Mass of total hydrocarbons (THC) (mg/test)	SHED test result TR_{TTIVST}: Mass of total hydrocarbons (THC) (mg/test) & (% of L_{TTIVST})
~~L3e~~	~~L_{TTIVST}: 2,000~~	~~TR_{TTIVST}:~~ ~~&~~
~~L4e~~	--	--
~~L5e-A~~	--	--
~~L6e-A~~	--	--
~~L7e-A~~	--	--

2.2.1.5.6. If the approved L-category vehicle complies with the evaporative emission requirements of the Euro 5 step, the manufacturer shall provide : See table below

2.2.1.5.6.1. The SHED laboratory test type IV results TR TTIVST to be indicated in the applicable part of the table below. The test results shall indicate both mg/test and % of L_{TTIVST} (3)

2.2.1.5.6.2. The evaporative emissions test type IV results TR $_{TTIVPT}$ and TR $_{TTIVPT}$ to be indicated in the applicable part of the table below. The test results shall indicate both mg/m ^{2} /day and % of L $_{TTIVPTftnk}$ and % of L $_{TTIVPTftbg}$ (3)

2.2.1.5.6.3. Euro 5 evaporative emission test results

Table 5-4
Euro 5 SHED or permeation test type IV results

Vehicle category	Permeation test (mg/m 2 /day) & (% of L TTIVPT		Mass of total hydrocarbons (THC) in SHED test (mg/test) & (% of L_{TTIVST})
	Fuel tank	Fuel tubing	Vehicle
~~L1e-A~~	~~$L_{TTIVPTftnk}$: 1,500~~	~~$L_{TTIVPTftbg}$: 15,000~~	~~L_{TTIVST}: 1,500~~
	~~$TR_{TTIVPTftnk}$:~~	~~$TR_{TTIVPTftbg}$:~~	~~TR_{TTIVST}:~~
~~L1e-B~~	~~$L_{TTIVPTftnk}$: 1,500~~	~~$L_{TTIVPTftbg}$: 15,000~~	~~L_{TTIVST}: 1,500~~
	~~$TR_{TTIVPTftnk}$:~~	~~$TR_{TTIVPTftbg}$:~~	~~TR_{TTIVST}:~~
~~L2e~~	~~$L_{TTIVPTftnk}$: 1,500~~	~~$L_{TTIVPTftbg}$: 15,000~~	~~L_{TTIVST}: 1,500~~
	~~$TR_{TTIVPTftnk}$:~~	~~$TR_{TTIVPTftbg}$:~~	~~TR_{TTIVST}:~~
L3e	--	--	L_{TTIVST}: 1,500
	--	--	TR_{TTIVST}: 697 & 46.5%

2.2.1.6. Test type V requirements: durability of pollution-control devices

2.2.1.6.1. Detailed of test vehicle(s), its powertrain and pollution-control devices explicitly documented and listed, emission test laboratory equipment and settings, if different from data under items 2.1.2.1.1. to 2.1.2.1.10. : Not applicable

2.2.1.6.2. Test type V carried out on: test track, on the road, on a chassis dynamometer : Not applicable

2.2.1.6.3. The test type V data outcome and the correspondent test report shall vary in relation with the chosen durability procedure set out in Article 23(3) of Regulation (EU) No 168/2013, established as follows : Mathematical durability procedure

2.2.1.6.3.3. Test type V conducted according to Article 23(3c) of Regulation (EU) No 168/2013, mathematical durability procedure

2.2.1.6.3.3.1. The Test Type I results of a vehicle with a mileage of 100 km or more, (see 2.2.1.2.16.), and the applicable deterioration factors set out in Annex VII(B) to Regulation (EU) No 168/2013 shall be entered in the table below along with the calculated test type V results

2.2.1.6.3.3.2. Test type V results in case of compliance with Article 23(3c) of Regulation (EU) No 168/2013 : See table below

Table 5-7

Test Type V Test Results (TR_{TTV})	Accumulated mileage (km)	CO (mg/km)	THC (mg/km)	NMHC (mg/km)	NO_X (mg/km)	THC + NO_X (mg/km)	PM (mg/km)
TR_{TTVlx} (i) (ii) (v)	2500 km	219	47	42	24	71	--
Deterioration Factor DF_x (iii) (no unit)		1.3	1.3	1.3	1.3	--	--
Final calculated TR_{TTVFin} = $DF_x \cdot TR_{TTVnx}$ (mg/km) & (% of L_X)		285 &29%	61 &61%	55 &81%	31 &52%	--	--
Limit value L_X (iv) (mg/km)		1000	100	68	60	--	--

(i) Where applicable.
(ii) Round to 0 decimal places.
(iii) Fixed deterioration factors set out in Annex VII(B) to Regulation (EU) No 168/2013; x = 1 to 4 and refers to the numbering of the pollutant constituents in Annex VI(A); e.g. the Euro 4 limit for CO is referred to as L_1, the limit for THC is referred to as L_2, the limit for NO_X as L_3 and the limit for PM as L_4.
(iv) Test limit x set out in Annex VI(A) to Regulation (EU) No 168/2013, x refers to the pollutant constituent numbering as explained under (iii).
(v) Replace x by 100, 2 500, or 3 500, in accordance with the provisions set out in Article 23(3), point (c) of Regulation (EU) No 168/2013.

2.2.1.7. Test type VI has not been assigned; consequently there are no results to be submitted

2.2.1.8. Test type VII requirements: measurement of CO_2 emissions, fuel consumption, electric energy consumption and electric range determination

2.2.1.8.1. Details of test vehicle(s), its powertrain and pollution-control devices explicitly documented and listed, emission test laboratory equipment and settings if different from data reported under items 2.1.2.1.1. to 2.1.2.1.10. : Not applicable

2.2.1.8.2. Documentation added according to UNECE Regulation No 101 (OJ L 138, 26.5.2012, p. 1) : ~~Yes~~/no

2.2.1.8.3. The vehicle manufacturer has ensured that the CO_2 emissions, fuel consumption, electric energy consumption and electric range data are provided to the buyer of the vehicle at the time of purchase of a new vehicle : Yes/~~no~~

2.2.1.8.4. A completed specimen of the test type VII result format used to inform the buyer of the new vehicle is added to the information document : Yes/~~no~~

2.2.1.8.5. Type VII test results, where applicable and for each reference fuel tested : See table below

2.2.1.8.6. CO_2 emissions and fuel consumption

Table 5-8
Test type VII result table for propulsions equipped with a combustion engine only or equipped with not-externally-chargeable (NOVC) hybrid electric propulsion

Test Type VII Test Results (TR_{TTVII})	Test No	CO_2 (g/km)	Fuel consumption (l/100 km) or ~~(kg/100 km)~~
$TR_{TTI\ Measured\ x}$ (i) (ii)	1	45.61	2.67
	2	--	--
	3	--	--
$TR_{TTI\ Measured\ Mean}$ (i) (ii)		45.61	2.67
K_i (i) (iii) (v) (no unit)		1	1
TR_{TTVIIx} (i) (iv) = $K_i \cdot TR_{TTI\ Measured\ x\ Mean}$		46	2.7
CO_2 and fuel consumption as declared by manufacturer	--	46	2.7

(i) Where applicable.
(ii) Round to 2 decimal places.
(iii) Round to 4 decimal places.
(iv) Round to 0 decimal places.
(v) Set K_i = 1 in case:
(a) the vehicle is <u>not</u> equipped with a periodically regenerating emission abatement system or;
(b) the vehicle is <u>not</u> a hybrid electric vehicle.

2.2.1.8.7. CO_2 emissions/fuel consumption (manufacturer's declared values) : See Table 5-8

Electric energy consumption and electric range : Not applicable

2.2.1.9. Test type VIII requirements: environmental on-board diagnostic (OBD)

2.2.1.9.1. Details of test vehicle(s), its powertrain and pollution-control devices explicitly documented and listed, emission test laboratory equipment and settings, if different from data reported under items 2.1.2.1.1. to 2.1.2.1.10. : Not applicable

2.2.1.9.2. The manufacturer shall enter the emission laboratory test type VIII results $TR_{TTVIIIx}$ in the table below (both in mg/km and in % of $TR_{TTVIIIx}$) : Not applicable

2.2.1.9.3. Test type VIII environmental results (Annex VI(B1) to Regulation (EU) No. 168/2013 :

e13*168/2013*01827*00
Société Nationale de Certification et d'Homologation

Table 5-11
OBD emission thresholds (section B1 of Annex V1 to Regulation (EU) No. 168/2013) and environmental test results in case of malfunction

Oxygen sensor detection:

Vehicle category	Propulsion class	OBD Thresholds (OT_x) / OBD Test results ($TR_{TTVIIIx}$) x = 1 to 3	Mass of carbon monoxide (CO)	Mass of total hydrocarbons (THC)	Mass of oxides of nitrogen (NO_X)
L3e, ~~L4e~~ ~~L5e-A~~ ~~L7e-A~~	PI / ~~PI Hybrid~~ Vmax < 130 km/h	OT_x (mg / km)	2,170	1400	350
		$TR_{TTVIIIx}$ (mg / km)	245	53	44
		$TR_{TTVIIIx}$ (% of OT_x)	11%	4%	13%

Misfire detection:

Vehicle category	Propulsion class	OBD Thresholds (OT_x) / OBD Test results ($TR_{TTVIIIx}$) x = 1 to 3	Mass of carbon monoxide (CO)	Mass of total hydrocarbons (THC)	Mass of oxides of nitrogen (NO_X)
L3e, ~~L4e~~ ~~L5e-A~~ ~~L7e-A~~	PI / ~~PI Hybrid~~ Vmax < 130 km/h	OT_x (mg / km)	2,170	1400	350
		$TR_{TTVIIIx}$ (mg / km)	138	52	165
		$TR_{TTVIIIx}$ (% of OT_x)	6%	4%	47%

2.2.1.9.4. Test type VIII environmental results (Annex VI(B2) to Regulation (EU) No. 168/2013 : Not applicable

e13*168/2013*01827*00
Société Nationale de Certification et d'Homologation

2.2.1.10. Test type IX requirements: sound level

2.2.1.10.1. Details of test vehicle(s), its powertrain and noise-abatement control devices explicitly documented and listed, test equipment and settings : See appendix 9

2.2.1.10.2. The approved L-category vehicle complies with UNECE Regulation No. 9 : ~~Yes~~/no

2.2.1.10.3. The approved L-category vehicle complies with UNECE Regulation No. 41 : Yes/~~no~~

2.2.1.10.4. The approved L-category vehicle complies with UNECE Regulation No. 63 : ~~Yes~~/no

2.2.1.10.5. The replacements noise-abatement device(s) for the approved L-category vehicle comply with UNECE Regulation No. 92 : ~~Yes~~/no

2.2.1.10.6. The approved L-category vehicle complies with the test requirements of Annex IX to Commission Delegated Regulation (EU) No 134/2014 and the administrative requirements of the equivalent UNECE Regulations have been included with the information document as set out in table 5-13 of Annex VIII : Yes/~~no~~
Tests were carried out in accordance with UN Regulation No 41-04

2.2.1.10.7. Replacement noise-abatement device(s) make(s) and type(s) : Not applicable

2.2.1.10.8. Location of the type-approval number (add drawings, photographs) : Not applicable

2.2.1.10.9. The test results shall be reported according to the administrative requirements set out in the table below :

Table 5-13
Test result requirements regarding sound level

Sound emission level	Euro 4		~~Euro 5~~
Sound level limits	~~Annex VI(D) to Regulation (EU) No 168/2013~~	Equivalent UNECE sound level limits to Annex VI(D) to Regulation (EU) No 168/2013	~~Annex VI(D) to Regulation (EU) No 168/2013~~
Test requirements	~~Annex IX to Regulation (EU) No 134/2014~~	UNECE Regulations referred to in Annex VI(D) to Regulation (EU) No 168/2013	~~UNECE Regulations referred to in Annex VI(D) to Regulation (EU) No 168/2013~~

Administrative requirements for vehicle subcategories regarding sound level:

Vehicle (sub)categories		
~~L1e, L6e-A~~	~~Annex I to UNECE Regulation No 63~~	~~UNECE Regulation No 63~~
L3e	Annex I to UNECE Regulation No 41-04	UNECE Regulation No 41-04
~~L2e~~, ~~L4e, L5e, L6e-B, L7e~~	~~Annex I to UNECE Regulation No 9~~	~~UNECE Regulation No 9~~
~~Replacement exhaust noise-abatement devices all categories~~	~~Annex I to UNECE Regulation No 92~~	~~UNECE Regulation No 92~~

2.2.1.10.10. In addition the manufacturer shall enter the test type IX results TR_{TTIX} in the table below where applicable (both in dB(A) and in % of SL_{EUx}) : See table below

e13*168/2013*01827*00
Société Nationale de Certification et d'Homologation

2.2.1.10.11. Euro 4 ~~or Euro 5~~ sound test results

Table 5-14
Sound level test results Euro 4 ~~or Euro 5~~

Vehicle category	Propulsion class	Euro 4 sound level limit SL_{EU4} (dB(A)) / Euro 4 test results $TR_{TTIXEU4}$ (dB(A)) & (% of SL_{EU4})	Euro 4 sound test procedure	~~Euro 5 sound level limit SL_{EU5} (dB(A)) / Euro 5 test results $TR_{TTIXEU5}$ (dB(A)) & (% of SL_{EU5})~~	~~Euro 5 sound test procedure~~
L3e	~~PI / CI / Hybrid PMR ≤ 25~~	~~SL_{EU4}:73~~	~~Commission Delegated Regulation (EU) No 134/2014 Annex VIII~~ / UNECE Regulation No 41-04	~~SL_{EU5}~~:	~~UNECE Regulation No 41~~
		~~$TR_{TTIXEU4}$~~:		~~$TR_{TTIXEU5}$~~:	
	PI / ~~CI / Hybrid~~ 25 < PMR ≤ 50	SL_{EU4}:74		~~SL_{EU5}~~:	
		$TR_{TTIXEU4}$: 70		~~$TR_{TTIXEU5}$~~:	
	PI ~~/ CI / Hybrid PMR > 50~~	~~SL_{EU4}:77~~		~~SL_{EU5}~~:	
		~~$TR_{TTIXEU4}$:~~		~~$TR_{TTIXEU5}$~~:	

2.2.1.10.12. Stationary sound level : 78 dB(A) at engine speed 3750 min^{-1}

2.2.1.10.13. Replacement noise-abatement device(s) make(s) and type(s) : Not applicable

2.2.1.10.14. Location of the type-approval number (add drawings, photographs) : Not applicable

2.2.1.11. Propulsion unit performance test results

2.2.1.11.1. Propulsion unit performance data to be provided to measure/determine the maximum vehicle design speed : Not applicable

2.2.1.11.1.1. Details of hardware and software of test vehicle(s), fitted components and accessories referred to in Annex X to Commission Delegated Regulation (EU) No 134/2014, Any deviations by test vehicle(s) from data provided in information document, Annex I: ~~yes~~/no. If yes, please provide list with deviations relevant for measuring the maximum vehicle design speed and gear in which it was reached : Not applicable

2.2.1.11.1.2. Test mass in running order: mass plus rider/driver : Not applicable

2.2.1.11.1.3. Test fuel specifications : Not applicable

2.2.1.11.1.4.	Powertrain lubricant specifications	: Not applicable
2.2.1.11.1.5.	Atmospheric pressure	: Not applicable
2.2.1.11.1.6.	Relative humidity	: Not applicable
2.2.1.11.1.7.	Ambient temperature	: Not applicable
2.2.1.11.1.8.	Wind speed and direction on test track	: Not applicable
2.2.1.11.1.9.	Test track condition (temperature, level of moisture etc.)	: Not applicable
2.2.1.11.1.10.	Maximum vehicle design speed measured and gear in which it is reached	: Not applicable
2.2.1.11.1.11.	Maximum vehicle design speed	e13*168/2013*01827*00 Société Nationale de Certification et d'Homologation
2.2.1.11.1.12.	Exemption L3e-A3 and L4e-A3 vehicles; maximum vehicle design speed declared by manufacturer	: 85 km/h
2.2.1.11.2.	Propulsion unit performance data to be provided to measure/determine the torque and power of the propulsion on the engine dynamometer	: See appendix 6
2.2.1.11.2.1.	Details of propulsion(s) hardware and software tested, test equipment and settings relevant for propulsion unit performance measurements on engine dynamometer tests	: Software ID: CUB_PRO_T125 Calibration ID: ED110951 Test equipment and settings see appendix 6
2.2.1.11.2.1.1.	List of components and part numbers/markings relevant for propulsion unit performance measurement on engine dynamometer, referred to in Annex X to Commission Delegated Regulation (EU) No 134/2014	: See information document
2.2.1.11.2.1.2.	Test fuel	: E5 gasoline specified in accordance with Appendix 2 of Annex II to Commission Delegated Regulation (EU) No 134/2014
2.2.1.11.2.1.3.	Powertrain lubricant specifications	: See appendix 6
2.2.1.11.2.1.4.	Atmospheric pressure	: See appendix 6

2.2.1.11.2.1.5.	Relative humidity	: See appendix 6
2.2.1.11.2.1.6.	Ambient temperature	: See appendix 6
2.2.1.11.2.1.7.	Correction factor for reference atmospheric conditions α 1	: See appendix 6
2.2.1.11.2.1.8.	Correction factor for the efficiency of the transmission α 2	: See appendix 6
2.2.1.11.2.1.9.	Engine cooling temperature	: See appendix 6
2.2.1.11.2.1.10.	Oil temperature at measuring point	: See appendix 6
2.2.1.11.2.1.11.	Exhaust temperature	: See appendix 6
2.2.1.11.2.1.12.	The manufacturer shall indicate the propulsion unit performance test results below	: See appendix 6
2.2.1.11.2.1.13.	Maximum permitted combustion engine/~~electric motor/propulsion~~ rotation speed	: See information document
2.2.1.11.2.1.14.	Maximum net power combustion engine	: See information document
2.2.1.11.2.1.15.	Maximum net torque combustion engine	: See information document
2.2.1.11.2.1.16.	Maximum continuous-rated power electric motor	: Not applicable
2.2.1.11.2.1.17.	Maximum continuous-rated torque electric motor	: Not applicable
2.2.1.11.2.1.18.	Maximum current e-motor at maximum continuous-rated power	: Not applicable
2.2.1.11.2.1.19.	Maximum continuous total power for propulsion(s)	: Not applicable
2.2.1.11.2.1.20.	Maximum continuous total torque for propulsion(s)	: Not applicable
2.2.1.11.2.1.21.	Maximum peak power for propulsion(s)	: Not applicable
2.2.1.11.2.1.22.	Power/mass in running order ratio	: 0.06 kW/kg
2.2.1.11.2.1.23.	Specific fuel consumption, g/kWh at maximum net power and power	: See appendix 6

2.2.1.11.2.1.24.	Propulsion unit performance sweep graphs of total power and torque vs. engine speed (1200 rpm to propulsion speed governor rpm, step 400 rpm). Secondary variables: spark angle, A/F ratio and mass air-flow (measured or calculated)	: Not applicable
2.2.1.11.2.1.25.	Maximum speed of vehicle and gear in which it is reached ... km/h) (only for subcategories: L1e, L2e, L6e, L7e-B1, L7e-C)	: Not applicable

e13*168/2013*01827*00
Société Nationale de Certification et d'Homologation

2.2.2.	(B) Functional safety test reports	
2.2.2.1.	Front and rear protective structures	
2.2.2.1.1.	Description and justification of the relevant provisions against which the vehicles has been assessed	: Not applicable
2.2.2.2.	Driver-operated controls including identification of controls, tell-tales and indicators	
2.2.2.2.1.	Detailed list of controls, tell-tales, tell-tales colours and indicators of the vehicle	: See information document
2.2.2.2.2.	Assessment of the visibility	: Passed
2.2.2.3.	Installation of lighting and light-signalling devices, including automatic light switching	
2.2.2.3.1.	Specific test conditions (e.g. indicator-bulb malfunction)	: Tests were carried out in accordance with UN Regulation No 53.03
2.2.2.4.	Safety belt anchorages and safety belts	
2.2.2.4.1.	Description and justification of the relevant provisions against which the vehicle has been assessed	: Not applicable

2.2.2.5.	Installation of tyres	
2.2.2.5.1.	Maximum tyre envelope sizes applied for the clearance assessment e13*168/2013*01827*00 Société Nationale de Certification et d'Homologation	: Front – 80/90-17 M/C outer diameter: 576 mm section width: 80 mm 70/90-17 M/C outer diameter: 558 mm section width: 69 mm Rear – 90/90-17 M/C outer diameter: 594 mm section width: 90 mm 80/90-17 M/C outer diameter: 576 mm section width: 80 mm
2.2.2.6.	Vehicle occupant protection, including interior fittings and vehicle doors	
2.2.2.6.1.	Values of radii measurement of interior projections in sufficient detail	: Not applicable
2.2.2.7.	Maximum continuous total power and/or maximum vehicle speed limitation by design	
2.2.2.7.1.	Maximum vehicle speed and/or maximum continuous total power for vehicles equipped with PI/CI combustion engine limited by	: Not applicable
	(a) the properties, timing or presence of the spark igniting the fuel/air mixture in the cylinder(s)	: ~~Yes/no~~
	(b) the amount of air intake of the engine	: ~~Yes/no~~
	(c) the amount of fuel intake of the engine	: ~~Yes/no~~
	(d) the mechanically-controlled output rotation speed of the drive-train, such as clutch, transmission or final drive	: ~~Yes/no~~
2.2.2.7.2.	Maximum vehicle speed and/or maximum power shall be limited by means of two or more of the following, for vehicles which are propelled by means of one or more electric motors, including pure and hybrid electric vehicles	: Not applicable

	(a) reduction of the maximum power output of one or more electric motors based on the vehicle or rotation speed as sensed internally to the electric motor	: ~~Yes/no~~
	(b) reduction of the maximum power output of one or more electric motors based on the actual vehicle speed as sensed fully externally to the electric motor	: ~~Yes/no~~
	(c) physical vehicle speed limitation by means of internal or external components such as a maximum achievable revolution speed of an electric motor	: ~~Yes/no~~
2.2.2.7.3.	Maximum vehicle speed and/or maximum power shall be limited by means of two or more of the following, for vehicles which are propelled by other means than those referred to in 2.2.7.1. and 2.2.7.2.	: Not applicable
2.2.3.	(C)Vehicle construction test reports	
2.2.3.1.	Arrangements for type-approval procedures	: See table below

Delegated act reference	Annex No	Virtual and/or self-testing	Subject	Restrictions / Comments	Applied
Commission Delegated Regulation (EU) No 134/2014	X	Self-testing	Testing procedures on maximum vehicle design speed	Only for subcategories L3e, L4e and L5e and does not include any other propulsion unit performance testing	~~Yes~~/no
Commission Delegated Regulation (EU) No 3/2014	II	Self-testing	Audible warning devices	Installation only	~~Yes~~/no
Commission Delegated Regulation (EU) No 3/2014	VIII	Self-testing	Driver-operated controls including identification of controls, tell-tales and indicators	Speedometer only	~~Yes~~/no
Commission Delegated Regulation (EU) No 3/2014	IX	Virtual testing	Installation of lighting and light-signalling devices	Dimensions only	~~Yes~~/no
Commission Delegated Regulation (EU) No 3/2014	X	Virtual testing	Rearward visibility	Installation only; only according to UN Regulation No 81	~~Yes~~/no
Commission Delegated Regulation (EU) No 3/2014	XV	Virtual testing	Installation of tyres	Only where clearance exceeds 10 mm	~~Yes~~/no
Commission Delegated Regulation (EU) No 44/2014	XIV	Self & virtual testing	Registration plate space		~~Yes~~/no
Commission Delegated Regulation (EU) No 44/2014	XVI	Self-testing	Stands	Only point 2.5. stand retention systems	~~Yes~~/no
This Commission Implementing Regulation(EU) No 901/2014	V	Self-testing	Statutory plate and EU type-approval mark		~~Yes~~/no

2.2.3.2. Requirements applying to coupling devices and attachments

e13*168/2013*01827*00
Société Nationale de Certification et d'Homologation

2.2.3.2.1. Dynamic strength test (endurance test) coupling ball and/or head: ~~passed/failed~~ : Not applicable

2.2.3.2.2. Test results dynamic strength test (endurance test) : Not applicable

2.2.3.3. Requirements applying to external projections

2.2.3.3.1. Values of radii measurement of exterior projections in sufficient detail : See information document and appendix 14

2.2.3.3.2. Description and justification of the relevant provisions against which the vehicle has been assessed : See appendix 14

2.2.3.4. On-board diagnostics (OBD) functional requirements : See information document

Component	Diagnostic trouble code	Monitoring strategy	Fault detection criteria	MI activation criteria	Secondary parameters	Preconditioning	Demonstration test	Default mode
O_2 sensor	P0131	O2 Sensor Circuit Low Voltage	output voltage O2 sensor upstream catalyst	5 sec. after Fault	1cyl O2 sensor reach the dew point and no O2 sensor heating fault etc.	N.A.	idle	None
MAP sensor	P0107	Circuit check, min limit exceeds	pressure sensor voltage > UADPSMN	5 sec. after Fault	time after start end >2sec	N.A.	idle	None
TPS	P0122	Circuit check, min limit exceeds	Throttle/Pedal Position Sensor/Switch Circuit Low	5 sec. after Fault	engine speed ＞192rpm	N.A.	idle	None
Engine speed sensor	P0322	Synchronisation didn't take place by some certain phase sensor signals has been detected.	Ignition/Distributor Engine Speed Input Circuit No Signal	3 driving cycles	engine speed	N.A.	idle	None

e13*168/2013*01827*00
Société Nationale de Certification et d'Homologation

2.2.3.5. Stands

2.2.3.5.1. Detailed description and assessment of the system used to prevent propulsion of the vehicle when the stand is in use : See information document

3. Test results sheet

3.1. The test-results sheet appended to the EU type-approval certificate, as set out in Article 30(3) of Regulation (EU) No 168/2013 shall have the structure and contain the information established in point 2.2. of this Annex.

Vehicle type : Cub pro 125
Manufacturer : Kamax Group Limited

Test minutes of braking system — Appendix 3

0. Test condition

0.1. Test date : May 29, 2023

0.1.1. Temperature : 299K

0.1.2. Wind speed : 1.3 m/s

0.2. Test site : Tianjin, P.R.China

1. Test facilities : The test equipment used was in compliance with the requirements of the Regulation.

2. Test object(s)

2.1. Type : Cub pro 125

Variant : 0

Version : 2

e13*168/2013*01827*00
Société Nationale de Certification et d'Homologation

2.2. Technically permissible mass on axles

Axle 1 [kg] : 120

Axle 2 [kg] : 180

2.3. Load conditions of the vehicle during the test

	Unladen	Laden
Axle 1 [kg]	74	120
Axle 2 [kg]	111	180
Total [kg]	185	300

2.4.	Number and arrangement of the axles	:	2 axles
2.5.	Brief description of the service braking device	:	Single braking acting on the front axle as front brake system. Single braking acting on the rear axle as rear brake system.
	Front brake	:	Hand lever, hydraulic transfer, one front disc brake
	Manufacturer of front brake system	:	HT
	Manufacturer of front brake pad	:	HT
	Rear brake	:	Foot pedal, lining transfer, one rear drum brake
	Manufacturer of the brake system	:	CQYS
	Manufacturer of brake pad	:	CQYS
2.6.	Other devices (anti-lock, etc…)	:	ABS on front wheels
2.7.	Remark	:	n.a.

e13*168/2013*01827*00
Société Nationale de Certification et d'Homologation

e13*168/2013*01827*00

3. Test results

Société Nationale de Certification et d'Homologation

3.1. Dry stop test-single brake control actuated

- Vehicle condition: lightly loaded/laden, engine disconnected;
  initial brake temperature≥55ºC and ≤100° C.

Conditions	Test speed [km/h]	Measured performance [m/s²]	Measured force applied to control [N]
Laden			
Front brake	59.6	5.28	116
Rear brake	60.4	3.67	211

3.2. Dry stop test-all service brake control actuated

- Vehicle condition: lightly loaded, engine disconnected,
  initial brake temperature≥55° C and ≤100° C
  initial speed lower of 0.9*Vmax or 100km/h

Test speed [km/h]	Measured performance [m/s²]	Stopping distance (corrected) [m]	Measured force applied to control	
			Front brake [N]	Rear Brake [N]
76.3	8.25	32.2	97	188

3.3. High speed test-all service brake control actuated: N.A.

3.4. Wet brake test-all service brake control actuated,

-vehicle condition: Engine disconnected, initial brake temperature≥55ºC and ≤100°C

Each service braking device applied separately and a_{ave}=2.5~3.0m/s^2

Conditions	Test speed	Measured performance [m/s^2]			Measured force applied to control
Laden					
Front brake	**[km/h]**	**Ave.**	**0.5-1s**	**Max**	**[N]**
1	60.3	2.80	3.04	3.61	58
2	59.7	2.90	3.07	3.78	61
3	59.2	2.84	3.09	3.84	59
Average		2.85	3.07	3.74	59
Wet brake	60.4	2.48	2.72 89%	3.90 104%	58

3.5. Heat fade test (fade test)

e13*168/2013*01827*00
Société Nationale de Certification et d'Homologation

condition : Laden, dry brakes

distance between the initiation of two consecutive stops : 1000 m

number of brakings : 10

Conditions		Front brake	Rear brake
Applied force to the control to maintain a mean deceleration of 3.0-3.5 m/s2	[N]	69	178
Initial vehicle speed, Front: lower of 100 km or 0.7Vmax. Rear: lower of 80 km or 0.7Vmax.	[km/h]	60.1	60.4

Vehicle type : Cub pro 125
Manufacturer : Kamax Group Limited

Conditions 60% of ref. Test	Test speed [km/h]	Measured performance [m/s²]	measured force applied to control, [N]
Reference test Front brake	59.6	5.28	116
Type-I test Front brake	60.3	4.54 86%	114
Reference test Rear brake	60.4	3.67	211
Type-I test Rear brake	60.7	2.94 80%	208

3.6. Parking brake test (if applicable) : Not applicable

3.7. Measurement of PBC : The PBC is determined using the method specified in the Appendix 1 to Annex 3 of UN Regulation No. 78, 05 series of amendments.

e13*168/2013*01827*00
Société Nationale de Certification et d'Homologation

High friction surface : 0.93

Low friction surface : 0.42

3.8. Anti-lock device test minutes

3.8.1. Stops on a high friction surface : initial speed lower of 0.9*Vmax or 60km/h ABS on, all service brake control actuated $S \leq 0.0063V^2$, or MFDD $\geq 6.17 m/s^2$, and no wheel lock

Fully cycling Lightly loaded [km/h]	Measured performance [m/s²]	Measured force applied to control	
		Front Brake [N]	Rear Brake [N]
60.0	7.77	225	33

3.8.2. Stops on a low friction surface : lightly loaded, engine disconnected, dry brakes initial speed 60 km/h,
initial brake temperature ≥ 55 ºC and ≤ 100 ºC both service braking devices applied simultaneously
MFDD≥6.87*PBC

Fully cycling Lightly loaded [km/h]	measured performance [m/s²]	Measured force applied to control	
		Front Brake [N]	Rear Brake [N]
60.0	3.45	219	46

3.8.3. Wheel lock checks on high and low friction surface with ABS on

Front axle	High friction, ~~80 km/h or~~ 0.8 Vmax	no wheel lock	Yes ~~/ no~~
	Low friction, 60 km/h ~~or 0.8 Vmax~~	no wheel lock	Yes ~~/ no~~

3.8.4. Wheel lock checks on high to low friction surface transition with ABS on

Front axle	~~50 km/h or~~ 0.5 Vmax	no wheel lock	Yes ~~/ no~~

3.8.5. Wheel lock checks on low to high friction surface transition with ABS on

Front axle	~~50 km/h or~~ 0.5 Vmax	no wheel lock	Yes ~~/ no~~
	Continuous deceleration	Within 1 second, deceleration shall increase	Yes ~~/ no~~

3.8.6. Stops with an ABS electrical failure : Initial speed lower of 0.9*Vmax or 60km/h.
Yellow warning lamp shall be activated.

Conditions	test speed [km/h]	measured performance [m/s²]	Measured force applied to control [N]
Front brake	60.5	4.92	101

Vehicle type : Cub pro 125
Manufacturer : Kamax Group Limited

Test minutes of audible warning device — Appendix 4

0.	Test condition	
0.1.	Test place	: Chongqing, P.R.China
0.2.	Test date	: July 26, 2023
1.	Test facilities	: The test equipment used was in compliance with the requirements of UN R28
2.	Test vehicle(s)	
2.1.	Type	: Cub pro 125
	Variant	: 0
	Version	: 2
2.2.	Identification number	: R71XCJL12P4001003
2.3.	Type of horn	: DL126J-12V
2.4.	Approval number	: E9*28R00/05*6693*00
3.	Test results	
3.1.	Ambient noise in dB(A)	: 49
3.2.	Test voltage in V	: 13
3.3.	Max. sound pressure level in 7 m distance in dB(A)	: 91
3.4.	Height of microphone above the ground in m (0.5~1.5m)	: 0.7 m

Vehicle type : Cub pro 125
Manufacturer : Kamax Group Limited

Test minutes of lighting installation

Appendix 5

0. Test condition

e13*168/2013*01827*00
Société Nationale de Certification et d'Homologation

0.1.	Test place	:	Chongqing, P.R.China
0.2.	Test date	:	July 24, 2023
1.	Test facilities	:	The test equipment used was in compliance with the requirements of the Regulation.
2.	Test vehicle(s)		
2.1.	Type	:	Cub pro 125
	Variant(s)	:	0
	Version(s)	:	2
	Identification number	:	R71XCJL12P4001003
3.	Test results		
3.1.	Installation of lighting and light-signalling devices	:	According to UN R53-03
	Conformity checks	:	Requirements fulfilled
	Method used for the definition of the apparent surface	:	Boundary of illuminating surface ~~Light emitting surface~~
	Automatically switched-on headlamp	:	~~Daytime running lamp~~ The vehicle was equipped with headlamps that switch on automatically in compliance with UN Regulation No. 53
	Bend lighting	:	Not applicable

Vehicle type : Cub pro 125
Manufacturer : Kamax Group Limited

Test minutes of max. engine power and torque — Appendix 6

0.	Test condition	
0.1.	Test place	: Chongqing, P.R.China
0.2.	Test date	: July 21, 2023
1.	Test facilities	: The test equipment used was in compliance with the requirements of the Regulation.
2.	Test vehicle(s)	e13*168/2013*01827*00 Société Nationale de Certification et d'Homologation
2.1.	Type	: Cub pro 125
	Variant	: 0
	Version	: 2
2.2.	Engine code / number	: 153FMI/ 1P004571
3.	Engine performance	
3.1.	Test conditions	
3.1.1	Pressures measured at maximum power	
3.1.2	Barometric	: 97.6 kPa
3.1.3	Water vapour pressure	: 3.20 kPa
3.1.4	Exhaust (to be measured when the original induction systems are not used)	: --
3.1.5	Inlet depression at engine intake system (to be measured when the original induction systems are not used)	: --
3.1.6	Temperatures measured at maximum power of the engine	
	Ambient temperature	: 302 K
	Relative humidity	: 80.0 %

	Intake air	: 302 K
	Outlet of the inlet inter- cooler	: --
	Cooling liquid	e13*168/2013*01827*00 Société Nationale de Certification et d'Homologation
	Engine cooling liquid outlet	: --
	Reference point in case of air cooling	: 471 K
	Oil in the oil sump	: 364 K
	Oil at the outlet from oil cooler	: --
	Fuel	
	Fuel at the inlet of injection system	: 302 K
	Exhaust gas, measured at right angles to the exhaust flange(s) of the exhaust manifolds	: 1051 K
3.1.7	Characteristics of the dynamometer	
	Make	: TIANBO
	Type	: QC100-30
3.1.8	Fuel	
	For positive ignition engines operating on liquid fuel	
	Make	: Haltermann
	Specification	: Reference fuel referred to in Appendix 2 of Annex II to Commission Delegated Regulation (EU) No 134/2014
	Anti-knock additive (lead, etc.)	
	Type	: Not applicable
	Content mg/litre	: Not applicable
	Octane number	

RON No.	:	101.3
MON No.	:	89.5
Relative density		
at 15 ° C	:	751.5 kg/m^3
at 4 ° C	:	--
Ethanol content	:	4.9 %v/v

3.1.9 Lubricant

Make	:	Valvoline
Specifications	:	SL
SAE viscosity grade	:	15W-40

3.1.10 Correction factor for mechanical efficiency of the transmission

Overall factor $\frac{1}{(n1*n2*n3*n4)}$: 1.042

Gear wheel	(n1)	:	0.98*0.98
Chain	(n2)	:	N.A.
Belt	(n3)	:	N.A.
Hydraulic coupling or converter	(n4)	:	N.A.

Vehicle type : Cub pro 125
Manufacturer : Kamax Group Limited

Detailed results of measurement

Engine speed	Rotational speed of dynamometer brake	Dynamometer brake load	Torque measured at crankshaft	Power measured	Barometric pressure	Ingested air temperature	Steam pressure	Atmospheric correction factor a1	Mechanical correction factor a2	Corrected torque at crankshaft	Corrected power	Measured fuel flow (not corrected)	Engine cooling temperature b)	Oil temperature at measuring point	Air temperature after pressure charger	Exhaust temperature	Air temperature downstrem of supercharger	Pressure downstream of supercharger
min^{-1}	min^{-1}	N	Nm	kW	KPa	K	kPa			Nm	kW	g/ kWh	K	K	K	K	K	kPa
8513	2753	---	5.96	5.31	97.6	302	3.2	1.068	1.042	6.63	5.91	380	465	351	---	1062	---	---
8008	2590	---	6.66	5.59	97.6	302	3.2	1.068	1.042	7.41	6.22	352	470	359	---	1061	---	---
7523	2433	---	7.20	5.67	97.6	302	3.2	1.068	1.042	8.01	6.31	347	471	364	---	1051	---	---
7018	2270	---	7.66	5.63	97.6	302	3.2	1.068	1.042	8.52	6.26	344	474	368	---	1048	---	---
6542	2116	---	7.96	5.45	97.6	302	3.2	1.068	1.042	8.85	6.06	363	473	371	---	1042	---	---
6039	1953	---	8.20	5.18	97.6	302	3.2	1.068	1.042	9.12	5.77	369	469	373	---	1041	---	---
5542	1792	---	8.30	4.82	97.6	302	3.2	1.068	1.042	9.24	5.36	371	465	373	---	1027	---	---
5028	1626	---	8.35	4.40	97.6	302	3.2	1.068	1.042	9.29	4.89	384	460	373	---	1026	---	---
4501	1456	---	8.30	3.91	97.6	302	3.2	1.068	1.042	9.24	4.35	410	453	373	---	1018	---	---
4022	1301	---	8.19	3.45	97.6	302	3.2	1.068	1.042	9.11	3.84	423	445	373	---	1016	---	---

Location of measuring point : the measurement has been carried out :
~~a)at the liquid cooling point~~
b)at the spark plug washer
~~c)elsewhere , at~~

Maximum net power, measured : **6.31 kW at 7523 min^{-1}**

Maximum net torque, measured : **9.29 Nm at 5028 min^{-1}**

Maximum net power, declared : **6.3 kW at 7500 min^{-1}**

Maximum net torque, declared : **9.3 Nm at 5000 min^{-1}**

e13*168/2013*01827*00
Société Nationale de Certification et d'Homologation

Vehicle type : Cub pro 125
Manufacturer : Kamax Group Limited

Test minutes of tyre installation

e13*168/2013*01827*00
Société Nationale de Certification et d'Homologation

Appendix 7

0.	Test condition		
0.1.	Test place	:	Chongqing, P.R.China
0.2.	Test date	:	July 24, 2023
1.	Test facilities	:	The test equipment used was in compliance with the requirements of the Regulation (EU) 3/2014
2.	Test vehicle(s)		
2.1.	Type	:	Cub pro 125
	Variant	:	0
	Version	:	2
2.2.	Identification number	:	R71XCJL12P4001003
2.3.	Maximum mass of vehicle [kg]	:	300
	- axle 1 [kg]	:	120
	- axle 2 [kg]	:	180
2.4.	Technically permissible axle weight		
	- axle 1 [kg]	:	120
	- axle 2 [kg]	:	180
2.5.	Number and arrangement of the axles	:	2 axles
2.6.	Tyre dimensions		
	- axle 1	:	80/90-17 M/C or 70/90-17 M/C
	- axle 2	:	90/90-17 M/C or 80/90-17 M/C
2.7.	Minimum load index and speed index		
	- axle 1	:	44S or 50P and 38P or 38S (actual) / 35G (required)
	- axle 2	:	49S or 49P and 50P or 44S (actual) / 48G (required)

2.8.	Clearance	: The space in which the wheels revolve allows unrestricted movement when the maximum permissible size of tyres is used, within the minimum and maximum suspension, steering and wheel guard constraints provided by the manufacturer.
	Load and speed capacity	: The maximum load ratings and speed category symbols of the used tyres cover the maximum permissible axle mass declared by the vehicle manufacturer and the maximum design speed of the vehicle.
	Tyre pressures	: The declared cold tyre pressures are stated on the vehicle. See information document

e13*168/2013*01827*00
Société Nationale de Certification et d'Homologation

Vehicle type : Cub pro 125
Manufacturer : Kamax Group Limited

Test minutes of EMC

e13*168/2013*01827*00
Société Nationale de Certification et d'Homologation

Appendix 8

0.	Test condition		
0.1.	Test place	:	Chongqing, P.R.China
0.2.	Test date	:	July 27, 2023
1.	Test facilities	:	The test equipment used was in compliance with the requirements of the Regulation.
2.	Test vehicle(s)		
2.1.	Type	:	Cub pro 125
	Variant	:	0
	Version	:	1
2.2.	Identification number	:	R71XCJL12P4001003
2.3.	Engine / ~~Motor~~ number	:	153FMI*1P004569*
2.4.	Sort of engine / ~~motor~~	:	Four-stroke, Single cylinders
2.5.	Engine / ~~Motor~~ revolution for radiated broadband emissions	:	2500 rpm
3.	Test condition	:	Closed installation
3.1.	Distance of the antenna (m)	:	10
3.2.	Height of the antenna (m)	:	3

Vehicle type : Cub pro 125
Manufacturer : Kamax Group Limited

Test results of broadband electromagnetic emissions from vehicle (Appendix 3 & Annex 4):
(PK detector)

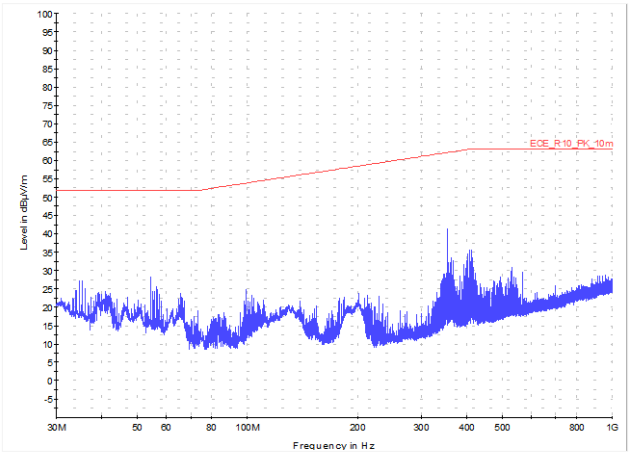

Left hand side antenna horizontal

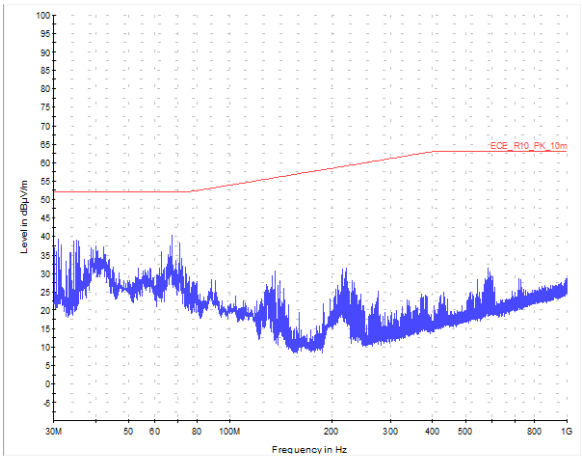

Left hand side antenna vertical

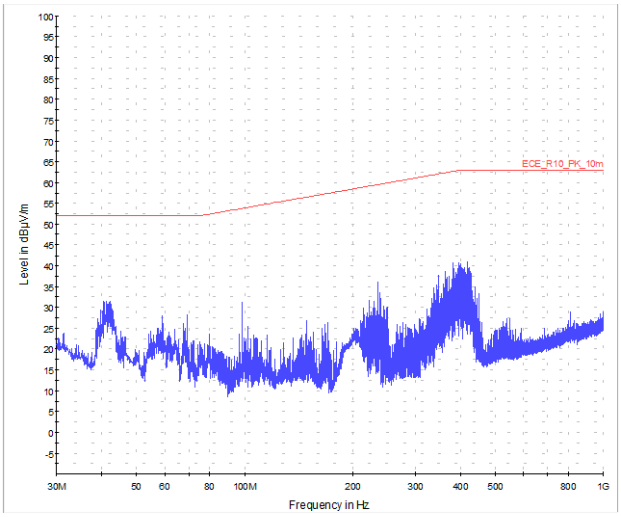

Right hand side antenna horizontal

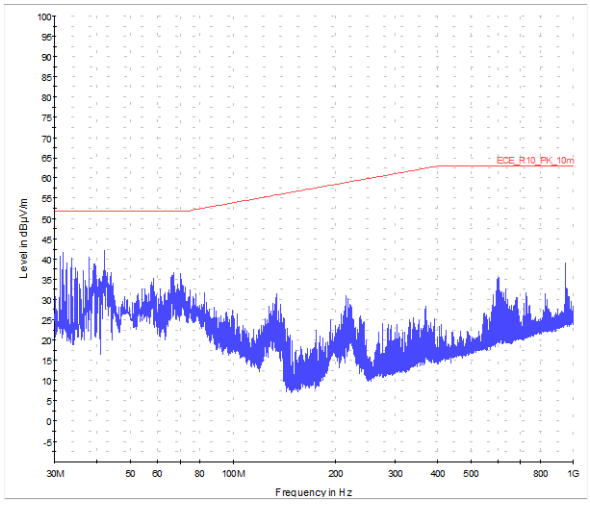

Right hand side antenna vertical

The measurement has been taken over the range of frequencies from 30 to 1000 MHz.

e13*168/2013*01827*00
Société Nationale de Certification et d'Homologation

Vehicle type : Cub pro 125
Manufacturer : Kamax Group Limited

Test results of narrowband electromagnetic emissions from vehicle (Appendix 5 & Annex 5):
(Average detector)

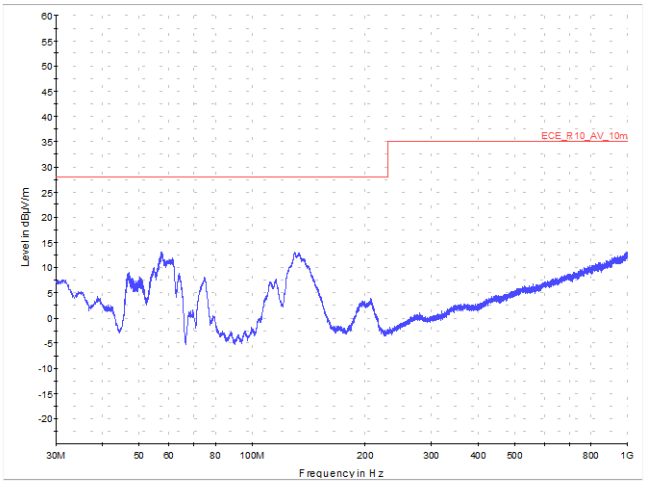

Left hand side antenna horizontal

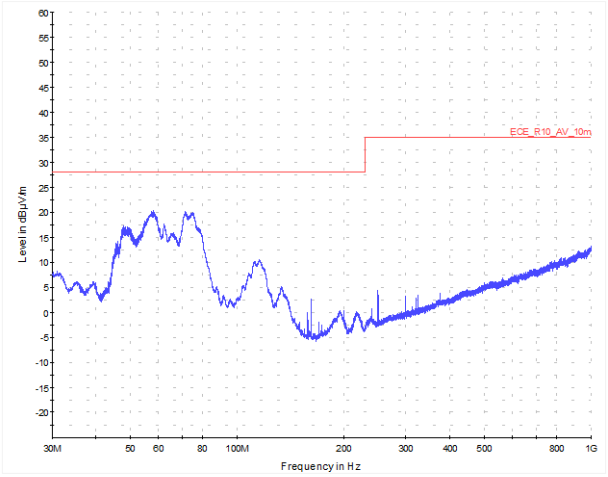

Left hand side antenna vertical

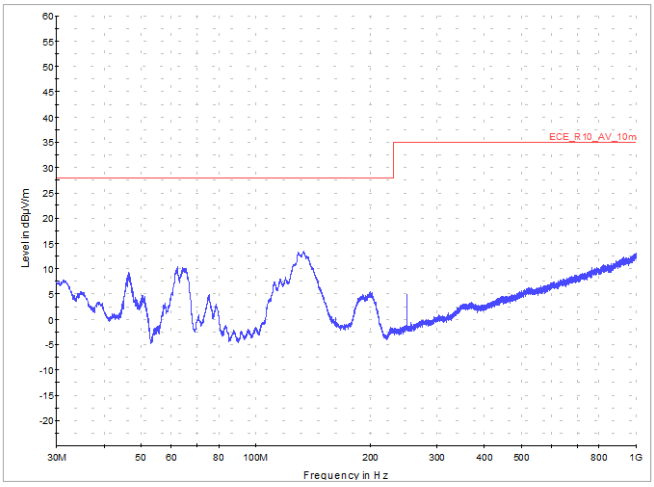

Right hand side antenna horizontal

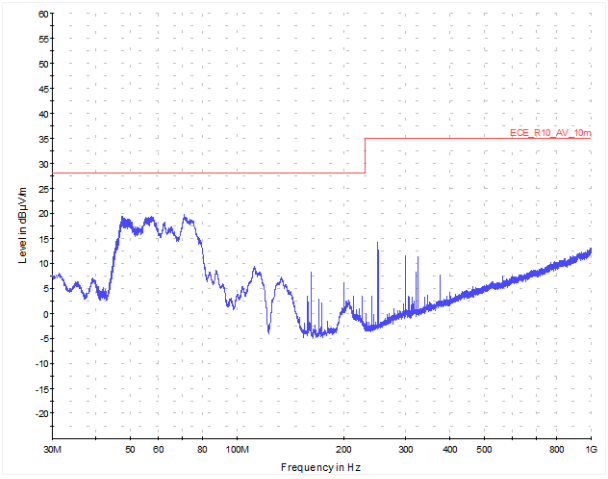

Right hand side antenna vertical

The measurement has been taken over the range of frequencies from 30 to 1000 MHz.

Vehicle type : Cub pro 125
Manufacturer : Kamax Group Limited

Test results of immunity to electromagnetic radiation (Annex 6):

Test method	:	Accordance with Annex 6 of UN R10
Specified frequency range	:	20 ~ 2000 MHz in vertical polarization
Alternatively spot frequencies	:	~~27, 45, 65, 90, 120, 150, 190, 230, 280, 380, 450, 600, 750, 900, 1300 and 1800 MHz~~
Field strength	:	30 V/m rms (over 90% of 20~2000 MHz)
Vehicle speed	:	50 km/h

During the tests performed in accordance with Annex 6, there was no any degradation of performance of "immunity related functions" listed below.

"50 km/h cycle" vehicle test conditions	*Failure criteria*
Vehicle speed 50 km/h (respectively 25 km/h for L_1, L_2 vehicles) ±20 per cent (vehicle driving the rollers). If the vehicle is equipped with a cruise control system, it shall be operational.	Speed variation greater than ±10 per cent of the nominal speed. In case of automatic gearbox: change of gear ratio inducing a speed variation greater than ±10 per cent of the nominal speed.
Dipped beams ON (manual mode)	Lighting OFF
Direction indicator on driver's side ON	Frequency change (lower than 0.75 Hz or greater than 2.25 Hz). Duty cycle change (lower than 25 per cent or greater than 75 per cent).
Horn OFF	Unexpected activation of horn
"brake cycle" vehicle test conditions	*Failure criteria*
To be defined in brake cycle test plan. This must include operation of the brake pedal(unless there are technical reasons not to do so) but not necessarily an anti-lock brake system action.	Stop lights inactivated during cycle Brake warning light ON with loss of function. Unexpected activation.

Test result : Passed

e13*168/2013*01827*00
Société Nationale de Certification et d'Homologation

Vehicle type : Cub pro 125
Manufacturer : Kamax Group Limited

Test minutes of noise measuring

Appendix 9

e13*168/2013*01827*00
Société Nationale de Certification et d'Homologation

0.	Test condition		
0.1.	Test place	:	Chongqing, P.R.China
0.2.	Test date	:	July 26, 2023
1.	Test facilities	:	The test equipment used was in compliance with the requirements of the Regulation.
2.	Test vehicle(s)		
2.1.	Type	:	Cub pro 125
	Variant	:	0
	Version	:	2
2.2.	Identification number	:	R71XCJL12P4001003
2.	Engine		
2.1.	Manufacturer	:	Chongqing Yinxiang Motorcycle Group Co., Ltd.
2.2.	Code	:	153FMI
2.3.	Cycles	:	Four stroke / ~~two stro~~ke
2.4.	Net max. power (according to ...)	:	6.3 kW at 7500 min^{-1} (Annex X to Regulation (EU) No 134/2014)
2.5.	Maximum design speed [km/h]	:	85
3.	Transmission	:	manual
4.	Equipment		
4.1.	Exhaust silencer		
	Manufacturer or authorized representative	:	SF
	EC type-approval number	:	--
	Type	:	CUB125

	In acc. with drawing no.	: Cub pro 125-17
4.2.	Air filter / Intake silencer	e13*168/2013*01827*00 Société Nationale de Certification et d'Homologation
	Manufacturer or authorized representative	: YZ
	EC type-approval number	: --
	Type	: 125
	In acc. with drawing no.	: Cub pro 125-16
4.3.	Tyre size	
	Front	: 70/90-17 M/C
	Rear	: 80/90-17 M/C
5.	Measurement results	: Passed
5.1.	Sound level of motorcycle in motion	: Power-to-mass ratio index (PMR) = 34.1 Class: II

Full throttle acceleration

		Reference acceleration	$a_{wot,ref}$ (m/s²)	1.26	Upper	1.39	Target acceleration	a_{urban} (m/s²)	1.02					
Test No.	Used gear position	The speed and engine speed measurements at AA', PP' and BB'					Level of ambient noise dB(A)	Noise level dB(A)					$L_{wot(i)}$
		Specified speed	VAA (km/h) nAA (min-1)	VPP' (km/h) nPP' (min-1)	VBB' (km/h) nBB' (min-1)			Measured value		Compensated value			
								Left	Right	Left	Right		
1	2nd	40	*35.2* *4302*	*40.6* *4961*	*44.8* *5475*		*48*	*71.5*	*72.0*	*70.5*	*71.0*		***70.9***
2			*34.3* *4192*	*39.7* *4851*	*43.9* *5365*			*71.2*	*71.9*	*70.2*	*70.9*		
3			*34.8* *4253*	*40.0* *4888*	*44.2* *5401*			*71.7*	*71.9*	*70.7*	*70.9*		
Average of 3 runs			*34.8* *4249*	*40.1* *4900*	*44.3* *5414*					*70.5*	*70.9*		

Vehicle type : Cub pro 125
Manufacturer : Kamax Group Limited

Constant speed

e13*168/2013*01827*00
Société Nationale de Certification et d'Homologation

Test No.	Used gear position	The speed and engine speed measurements at AA', PP' and BB'					Level of ambient noise dB(A)	Noise level dB(A)				
		Specified speed	VAA (km/h) nAA (min-1)	VPP' (km/h) nPP' (min-1)	VBB' (km/h) nBB' (min-1)			Measured value		Compensated value		$L_{CRS(i)}$
								Left	Right	Left	Right	
1	2nd	40	*39.1*	*40.6*	*40.6*		*48*	*66.8*	*66.2*	*65.8*	*65.2*	***65.4***
			4778	*4961*	*4961*							
2			*39.8*	*40.1*	*40.3*			*65.4*	*66.2*	*64.4*	*65.2*	
			4864	*4900*	*4925*							
3			*39.9*	*40.8*	*40.8*			*65.7*	*66.7*	*64.7*	*65.7*	
			4876	*4986*	*4986*							
Average of 3 runs			*39.6*	*40.5*	*40.6*					*65.0*	*65.4*	
			4839	*4949*	*4957*							

Final Test Result 1)

	Calculation of the gear weighting factor	k	--	Calculation of the partial power factor	kp	***0.23***

Measured No.	Measured gear (i)	n.a.	Measured gear (i+1)	--	Noise level		dB(A)
	Calculation of the acceleration at		Calculation of the acceleration at		L_{wot}	L_{crs}	L_{urban}
	The lines AA' and BB'	The lines PP' and BB'	The lines AA' and BB'	The lines PP' and BB'			
1	***1.35***				***70.9***	***65.4***	***69.7***
2	***1.32***						
3	***1.30***						
Average	***1.32***						

L_{wot} : 70.9 dB(A)
L_{urban}: 70 dB(A)
L_{limit}: 74 dB(A)

1) measurement values are given rounded, with the 1dB(A) deduction in acc. with previsions of items 1.4.1. of Annex 3

5.2. Sound level of stationary motorcycle :

	Measurement result 3)		
	left-hand side dB(A) 4)	right-hand side dB(A) 4)	engine speed min^{-1} n=s/2, ~~n=3/4 s~~ 2)
1st measurement	--	77.8	3750
2nd measurement	--	77.6	3750
3rd measurement	--	77.8	3750
Average	--	77.7	3750
Test result	78 dB(A)/E 3)		

2) delete where inapplicable
3) 'E' indicates that the measurements in question were conducted in accordance with the Regulation
4) measurement values are given rounded in acc. with the provisions of section 2.5.2 and 2.5.3. of Annex 3

5.3. Additional sound emission provisions : N.A.

Vehicle type : Cub pro 125
Manufacturer : Kamax Group Limited

Test minutes of speedometer measuring — Appendix 10

e13*168/2013*01827*00
Société Nationale de Certification et d'Homologation

0.	Test condition		
0.1.	Test place		: Chongqing, China
0.2.	Test date		: July 24, 2023
1.	Test facilities		: The test equipment used was in compliance with the requirements of the Regulation.
2.	Test vehicle(s)		
2.1.	Type		: Cub pro 125
	Variant		: 0
	Version		: 2
2.2.	Identification number		: R71XCJL12P4001003
3.	Vehicle designed V_{max} [km/h]		: 85
4.	Actual mass as tested [kg]		: 185
5.	Distribution [kg]	Axle 1	: 74
		Axle 2	: 111
6.	Tyre dimensions	Axle 1	: 80/90-17 M/C
		Axle 2	: 90/90-17 M/C
6.1.	Tyre pressure [kPa]	Axle 1	: 230+20
		Axle 2	: 250+20
7.	Speedometer		
7.1.	Make(s)		: BOERXU
7.2.	Type		: SCY22-25A

8. Measurement

e13*168/2013*01827*00
Société Nationale de Certification et d'Homologation

8.1. Temp. at speedometer (°C) : 23

8.2. Test result : Passed

V_1 (Speedometer)	V_2 (Test speed)	V_1-V_2	Deviation	
[km/h]	[km/h]	[km/h]	Min	Max (0.1*V_2+4)
			[km/h]	[km/h]
40	35.6	4.4	0	7.6
68	60.6	7.4	0	10.1

Vehicle type : Cub pro 125
Manufacturer : Kamax Group Limited

Test minutes of fuel tank — Appendix 11

0.	Test condition		
0.1.	Test site	:	Chongqing, P.R.China
0.2.	Test date	:	July 21, 2023
1.	Test facilities	:	The test equipment used was in compliance with the requirements of the Regulation.
2.	Test vehicle(s)		
2.1.	Type	:	Cub pro 125
	Variant	:	0
	Version	:	2
3.	Test results	:	Passed
3.1.	Hydraulic test	:	The fuel tank passed the leak-tightness tests. Applied pressure: 30 kPa Any excess pressure or any pressure exceeding the service pressure was automatically released by a pressure check valve connected to evaporative control system.
3.2.	Overturn test	:	Fuel flow from the filler cap or any devices fitted in order to release excess pressure did not exceed 0 g/min even when the tank was fully inverted.
3.3.	Tests for fuel tanks made of materials other than metal	:	Not applicable
3.4.	Installation requirements	:	Fulfilled requirements in Annex IX of Regulation (EU) No 44/2014

Vehicle type : Cub pro 125
Manufacturer : Kamax Group Limited

Test minutes of passenger handholds and footrests — Appendix 12

0.	Test condition	
0.1.	Test place	: Chongqing, P.R.China
0.2.	Test date	: June 01, 2023
1.	Test facilities	: The test equipment used was in compliance with the requirements of the Regulation.
2.	Test vehicle(s)	
2.1.	Type	: Cub pro 125
	Variant(s)	: 0
	Version(s)	: 1, 2
	Identification number	: Version 1: without (Prototype) Version 2: R71XCJL12P4001003
3.	Test results	: Passed
3.1.	General requirements	: The requirements in Annex XIII of Regulation (EU) No 44/2014 were fulfilled.
3.2.	Strength test	: Footrests were capable of withstanding, without any permanent deformation, a vertical compression force of 1,700 N applied statically to the selected point at a maximum pressure of 2.0 MPa.
		: Version 1: Not applicable Version 2: The hand-grip bars was withstood simultaneously, without snapping, a vertical traction force of 2,000 N applied statically to the centre of their surface at a maximum pressure of 2.0 MPa.

e13*168/2013*01827*00
Société Nationale de Certification et d'Homologation

Vehicle type : Cub pro 125
Manufacturer : Kamax Group Limited

Test minutes of steer-ability

Appendix 13

0.	Test condition		
0.1.	Test site	:	Chongqing, P.R.China
0.2.	Test date	:	July 26, 2023
1.	Test facilities	:	The test equipment used was in compliance with the requirements of the Regulation.
2.	Test vehicle(s)		
2.1.	Type	:	Cub pro 125
	Variant(s)	:	0
	Version(s)	:	2
	Identification number	:	R71XCJL12P4001003
3.	Test results	:	Passed
3.1.	Steering test with circle radius of 12 m	:	The tests were carried out in accordance with Annex XIV of Regulation (EU) No 3/2014. No unusual vibration had been occurred under turning circle radius of 12 m at a speed of 6 km/h or more.
3.2.	Leaving test with circle radius of 10 m	:	The tests were carried out in accordance with Annex XIV of Regulation (EU) No 3/2014. No unusual vibration had been occurred during leaving curve at a speed of 23 km/h.
3.3.	Vibration in travel under max. speed	:	The tests were carried out in accordance with Annex XIV of Regulation (EU) No 3/2014. No unusual steering corrections and vibration had been occurred under travelling at a speed of $0.8 \times V_{max}$.

e13*168/2013*01827*00
Société Nationale de Certification et d'Homologation

Vehicle type : Cub pro 125
Manufacturer : Kamax Group Limited

Test minutes of external projection

Appendix 14

e13*168/2013*01827*00
Société Nationale de Certification et d'Homologation

0.	Test condition	
0.1.	Test site	: Chongqing, P.R.China
0.2.	Test date	: July 24, 2023
1.	Test facilities	: The test equipment used was in compliance with the requirements of the Regulation (EU) 44/2014..
2.	Test vehicle(s)	
2.1.	Type	: Cub pro 125
	Variant	: 0
	Version	: 1, 2
2.2.	Identification number	: Version 1: Without (prototype) Version 2: R71XCJL12P4001003
3.	Test results	
3.1.	Edge of windscreen (≥ 2 mm)	: ~~Pass / Fail /~~ Not applicable
3.2.	Clutch/brake lever (≥ 7 mm)	: Pass / ~~Fail / Not applicable~~
3.3.	Front mudguard (≥ 2 mm)	: Pass / ~~Fail / Not applicable~~
3.4.	Ignition key protective cap	: Pass / ~~Fail / Not applicable~~
3.5.	Fuel filler cap (15 mm or cover)	: Pass / ~~Fail / Not applicable~~
3.6.	Wheel fittings	: Pass / ~~Fail / Not applicable~~
3.7.	Rubber or plastic (< 60 shore A)	: ~~Pass / Fail~~ / Not applicable
3.8.	"Grazing" ≤ 45° (group 1)	: Pass / ~~Fail / Not applicable~~
3.9.	"Collision" ≥ 45° (group 2)	: ~~Pass / Fail /~~ Not applicable

Vehicle type : Cub pro 125
Manufacturer : Kamax Group Limited

Test minutes of Masses and dimensions — Appendix 15

e13*168/2013*01827*00
Société Nationale de Certification et d'Homologation

0. Test condition

0.1. Test date : July 24, 2023

0.2. Test site : Chongqing, P.R.China

1. Test facilities : The test equipment used was in compliance with the requirements of the regulation.

2. Test vehicle(s)

2.1. Type : Cub pro 125

Variant : 0

Version : 1, 2

3. Test results : Passed

Masses (kg) and dimensions(mm)	Declared	Testing record
Mass of vehicle in running order	110	109
Distribution of that mass between the axles	49/61	47/62
Actual Mass of vehicle (Mass in running order together with rider and optional equipment)	185	185
Distribution of that mass between the axles	74/111	76/109
Vehicle length	1915	1930
Vehicle width (excluding mirror)	720	710
Vehicle height (excluding mirror)	1010	1025
Wheel base	1245	1245

Dimension tolerance: ±3%

Vehicle type : Cub pro 125
Manufacturer : Kamax Group Limited

Test minutes of Stands

e13*168/2013*01827*00
Société Nationale de Certification et d'Homologation

Appendix 16

0. Test condition

0.1. Test place : Chongqing, P.R.China

0.2 Test date : July 24, 2023

1. Test facilities : The test equipment used was in compliance with the requirements of the regulation.

		yes	no
2.	Condition of vehicle		
	Driving condition (tank filled fuel min of 90%)	☒	
	Tyre pressure(manufacturer standard)	☒	
	Gear in neutral position or Parking position	☒	
	Parking brake locked(if equipped)	---	---
	Steering lock engaged	☒	
3.	Equipment Of Test Vehicle		
3.1.	Main stand attached	☒	
3.1.1.	automation retracting	☒	
3.1.2.	double springs	☒	
3.2.	side stand attached	☒	
3.2.1.	~~automation retracting~~ or engine-off switch	☒	
3.2.2.	double springs	☒	
4.	Test		
4.1.	Horizontal surface		
	Test vehicle on side stand then turn by 3°around the vertical ,vehicle remains standing firmly, side stand does not retract.	☒	
4.2.	Inclined surface		

Inclination	Side stand		Main stand	
	required	result	required	result
Across left	6%	>6%	8%	>8%
Across right	6%	>6%	8%	>8%
Longitudinally down	6%	>6%	8%	>8%
Longitudinally up	8%	>8%	14%	>14%

Vehicle type : Cub pro 125
Manufacturer : Kamax Group Limited

Test minutes of rear-view mirror(s) installation measuring — Appendix 17

0. Test condition		
0.1. Test place	:	Chongqing, P.R.China
0.2. Test date	:	July 24, 2023
1. Test facilities e13*168/2013*01827*00 Société Nationale de Certification et d'Homologation	:	The test equipment used was in compliance with the requirements of the UN R81.
2. Test vehicle(s)		
Type	:	Cub pro 125
Variant	:	0
Version	:	2
2.1. Identification number	:	R71XCJL12P4001003
2.2. Category of vehicle	:	L3e-A1
2.3. Component type-approval mark	:	E13*81R00/02*9958*00
2.4. Number fitted	:	2
3. Test Minute(s)		
3.1. The rear-view mirrors installed on the vehicle shall be of Class L type approved under this Regulation.	:	Yes/~~ No/ Not applicable~~
3.2. Rear-view mirrors must be mounted or adjusted in such a way that the distance of the center of the reflective surface, as measured in a horizontal plane, is at least 280 mm outward from the longitudinal vertical plane passing through the center of the steering head of the vehicle. Before the measurement, the handlebar shall be placed in the straight ahead position and the mirror(s) shall be adjusted to its (their) normal position.	:	Yes/~~ No/ Not applicable~~
3.3. Rear-view mirror(s) shall be such that the driver can adjust it (them) in the normal driving position.	:	Yes/~~ No/ Not applicable~~

Vehicle type : Cub pro 125
Manufacturer : Kamax Group Limited

Test minutes of identification of controls, tell-tales and indicators — Appendix 18

0. Test condition

0.1. Test place : Chongqing, P.R.China

0.2. Test date : July 24, 2023

1. Test facilities : The test equipment used was in compliance with the requirements of the UN R60.

1. Test object(s) e13*168/2013*01827*00
Société Nationale de Certification et d'Homologation

type : Cub pro 125

variant : 0

version : 2

2. Test results : Passed

General requirements	☒	The controls, tell-tales and indicators referred to in point 2.1.10.of (EU)3/2014 Annex VIII shall be identified in accordance with the following requirements when they are fitted to a vehicle.
	☒	The symbols shall stand out clearly against the background.
	☒	The symbols shall be placed on the control or control tell-tale to be identified or in immediate proximity thereof. Where this is not possible, the symbol, control or tell-tale shall be joined by a continuous dash that is as short as possible.
	☒	Driving lamp shall be represented by parallel horizontal rays of light and passing lamp by parallel rays of light angled downwards.
	☒	When used for optical tell-tales, the colors shall follow the meanings specified.
Identification of controls		Pass / ~~Fail~~
Identification of tell-tales		Pass / ~~Fail~~
Identification of indicators		Pass / ~~Fail~~

Vehicle type : Cub pro 125
Manufacturer : Kamax Group Limited

Test minutes of Protection device — Appendix 19

0. Test condition : The test equipment used was in compliance with the requirements of the UN R62.

e13*168/2013*01827*00
Société Nationale de Certification et d'Homologation

0.1. Test place : Chongqing, P.R.China

0.2. Test date : July 24, 2023

1. Test vehicle(s)

Type : Cub pro 125
Variant : 0
Version : 2

2. Test results : Passed

Character of device	☐	Type 1
	☒	Type 2
	☐	Type 3
	☐	Type 4
Approval number	Not applicable	
Marking on the key	No code on the key	
Marking on the lock	No code on the lock	
General	☒	It is necessary to disable it in order to point, drive or move the vehicle straight ahead
	☒	The key can only be removed when the catch is fully engaged or withdrawn
	☒	The protective device shall be designed in such a way that it is impossible quickly and without attracting attention to open it, render it inoperative or destroy it
Key combinations	☒	The key locking system must incorporate at least 1,000 different combinations
Lock torque	☐	Cylinder lock can't be turned by a torque less than 2.45 Nm by use of a wrong key
Steering torque	☒	Withstand a static condition of a torque of 200 Nm along the axis of steering spindle without any deterioration
Only for type 3 or 4	☐	According to para. 3.2.2., 3.12., 4.1.2., 4.3. and 4.4.
Locked angle	☒	At least 20° to the left

Document information about **two-wheel motorcycle**

Reference number of information document: **168/2013-Cub pro 125-00**

Application date: **February 20, 2023**

e13*168/2013*01827*00

Société Nationale de Certification et d'Homologation

LIST OF CONTENT

I. 168/2013 INFORMATION DOCUMENT – GENERAL INFORMATION

II. CONTENT OF DRAWINGS

Drawing No.	Drawing Name
Cub pro 125-01-1	Complete Vehicle Dimension(Version 1)
Cub pro 125-01-2	Complete Vehicle Dimension(Version 1)（Optional)
Cub pro 125-01-3	Complete Vehicle Dimension(Version 2)
Cub pro 125-02	Cylinder head
Cub pro 125-03	Piston
Cub pro 125-04	The First Piston Ring
Cub pro 125-05	The Second Piston Ring
Cub pro 125-06	The Third Piston Ring
Cub pro 125-07	Cylinder
Cub pro 125-08	Fuel tank
Cub pro 125-09	Fuel Tank Installation
Cub pro 125-10	Ignition advance curve
Cub pro 125-11	Injection Advance Curve
Cub pro 125-12	Anti Radiation-Spark plug
Cub pro 125-13	Anti Radiation-High Voltage Cap
Cub pro 125-14	Induction System
Cub pro 125-15	Induction Manifold
Cub pro 125-16	Air Filter
Cub pro 125-17	Complete Exhaust System
Cub pro 125-18	Exhaust Pipe Work
Cub pro 125-19	Catalytic Convert
Cub pro 125-20	Oxygen Sensor
Cub pro 125-21	Engine Cycle
Cub pro 125-22	Crankcase-gas Recycling Device
Cub pro 125-23	Lubrication system
Cub pro 125-24	Transmission Diagram
Cub pro 125-25	Speedometer
Cub pro 125-26	Front fork assy.
Cub pro 125-27	Rear Suspension
Cub pro 125-28	Anti-lock braking system
Cub pro 125-29	Front Brake Pads assy
Cub pro 125-30	Rear Brake Pads assy
Cub pro 125-31	Front Brake Pad
Cub pro 125-32	Rear Brake Pad
Cub pro 125-33	Front brake
Cub pro 125-34	Hand Brake Lever and Foot brake Pedal
Cub pro 125-35	Hydraulic Reservoir
Cub pro 125-36	Brake System
Cub pro 125-37	Lighting Installation
Cub pro 125-38	Head Light
Cub pro 125-39	Stop Light
Cub pro 125-40	Direction Indicator Lamp
Cub pro 125-41	Control I.D. Indication and Tell-tale
Cub pro 125-42	Location of the Chassis Number and Statutory Plate
Cub pro 125-43	Manufacturer's Data Plate
Cub pro 125-44	Anti-theft Device
Cub pro 125-45	Horn Installation
Cub pro 125-46	Electric circuit of Horn
Cub pro 125-47	Space for Rear Registration Plate
Cub pro 125-48	Mirror Position

Cub pro 125-49	Mirror Installation
Cub pro 125-50	Stands
Cub pro 125-51	Footrests arrangement(Version1)
Cub pro 125-51-1	Footrests arrangement(Version2)
Cub pro 125-52	Saddle Height(Version1)
Cub pro 125-52	Saddle Height(Version2)
Cub pro 125-53	Chassis
Cub pro 125-54	VIN Structure
Cub pro 125-55	External Projection
Cub pro 125-56	Evaporative control system
Cub pro 125-57	Carbon canister
Cub pro 125-58	Ignition Coil(s)
Cub pro 125-59	Wiring Diagram
Cub pro 125-60	Autocontrol Fuel Injection System
Cub pro 125-61	Location of diagnostic connector
Cub pro 125-62	Tire Information
Cub pro 125-63	Hand-Hold(Version2)
Cub pro 125-64	Rim model
	Table 7.6.2.2
	Table 7.6.2.4
	OBD Service $01
	OBD Service $02
	OBD Service $03(4 Pages)
	OBD Service $06
	OBD Service $09
	Information Folder Sheet(2 Pages)
	Endurance Statement
	Structure Statement
	RMI Certificates(7 Pages)
	Powertrain Tampering Prevention Measures(Anti-Tampering)
	Anti-Tampering statement
	Statement Concerning Authority of Signature on COC Paper
	Sample of COC(2 Pages)

e13*168/2013*01827*00

Société Nationale de Certification et d'Homologation

INFORMATION DOCUMENT FOR THE PURPOSE OF EC TYPE-APPROVAL OF VEHICLES

According to Regulation (EU) number 168/2013
and Commission implementing Regulation (EU) number 901/2014 amended by 2020/239

tem No	(Sub) categories	Detailed information		
0.		**GENERAL INFORMATION**		
A.		**General information concerning vehicles**		
0.1.	L3e	**Make (trade name of manufacturer)**	:	KAMAX
0.2.	L3e	**Type** (17)	:	Cub pro 125
0.2.1.	L3e	Variant(s) (17)	:	0
0.2.2.	L3e	Version(s) (17)	:	Version: 1 (single saddle) Version: 2 (double saddle)
0.2.3.	L3e	Commercial name(s) (if available)	:	SUPER CUB, SUPER CUB 125, T125, C125, DM125, CUB PRO, CUB PRO 125
0.3.	L3e	**Category, subcategory and sub-subcategory of vehicle** (2)	:	L3e-A1
0.4.	L3e	**Company name and dress of manufacturer**	:	Kamax Group Limited Unit 917A 9/F Tower A New Mandarin Plaza No 14 Science Museum Road Tsimshatsui Kowloon, Hong Kong
0.4.1.	L3e	Name(s) and adress(es) of assembly plants	:	Chongqing Dalongyufeng Motorcycle Manufacturing Co., Ltd. No.100th, Qianqiu Avenue, Wan'gu town, Dazu District, Chongqing City, China
0.4.2.	L3e	Name and address of manufacturer's authorized representative, if any	:	Kamax Europe Gmbh Talhof 1,88709 Hagnau am Bodensee, Germany
0.5.	L3e	**Manufacturer's statutory plate(s)**		
0.5.1.	L3e	Location of the manufacturer's statutory plate (15) (18)	:	L, x530, y21, z425
0.5.2.	L3e	Method of attachment	:	Rivet on the stay left side front tube Refer to drawing No. Cub pro 125-42
0.5.3.	L3e	Photographs and/or drawings of the statutory plate (completed example with dimensions)	:	Refer to drawing No. Cub pro 125-43
0.6.	L3e	**Location of the vehicle identification number** (2)		
0.6.1.	L3e	Photographs and/or drawings of the locations of the vehicle identification number (completed example with dimensions)	:	On the right side of frame pipe, R, x530, y21, z425 Refer to drawing No. Cub pro 125-42
0.6.1.1.	L3e	The serial number of the type begins with	:	R71XCJL1********* Refer to drawing No. Cub pro 125-54
B.		**General information concerning systems, components or separate technical units**		
0.7.	L3e	**Make(s) (trade name(s) of manufacturer)**	:	n.a.
0.8.	L3e	**Type**	:	n.a.
0.9.	L3e	**Company name and address of manufacturer**	:	n.a.
0.10.		**Vehicle(s) for which the system/ separate technical unit is intended for** (21)	:	n.a.
0.11.	L3e	**Type-approval marks for components and separate technical units** (19)	:	n.a.

tem No	(Sub) categories	Detailed information		
C.		**General information regarding conformity of production and access to repair and maintenance information**		
0.12.		**Conformity of production**		
0.12.1.	L3e	Description of overall quality-assurance management systems	:	ISO 9001:2015
0.13.		**Access to repair and maintenance information**		
0.13.1.	L3e	Address of principal website for access to vehicle repair and maintenance information	:	https://www.kamaxcub.com/
0.13.2.	L3e	In the case of multi-stage type-approval, address of principal website for access to vehicle repair and maintenance information from manufacturer(s) at previous stage(s)	:	n.a.
1.		**GENERAL CONSTRUCTION CHARACTERISTICS**		
1.1.	L3e	Photographs and/or drawings of a representative vehicle	:	Refer to drawing No. Cub pro 125-01-1, Cub pro 125-01-2, Cub pro 125-01-3
1.2.	L3e	Scale drawing of the whole vehicle	:	Refer to drawing No. Cub pro 125-01-1, Cub pro 125-01-2, Cub pro 125-01-3
1.3.	L3e	Number of axles and wheels	:	2 axles, 2 wheels (one wheel in front axle and one wheel in rear axle)
1.3.1.	L3e	Axles with twinned wheels (23)	:	n.a.
1.3.2.	L3e	Powered axles (23)	:	R (Rear powered axle)
1.4.	L3e	Chassis (if any) (overall drawing)	:	Refer to drawing No. Cub pro 125-53
1.5.	L2e, L5e-B, L6e-B, L7e-A2, L7e-B2, L7e-C	Material used for the bodywork	:	n.a.
1.6.	L3e	Position and arrangement of the propulsion(s)	:	Refer to drawing No. Cub pro 125-01-1, Cub pro 125-01-2, Cub pro 125-01-3
1.7.	L4e, L5e-B, L6e-B, L7e-A2, L7e-B2, L7e-C	Hand of drive	:	n.a.
1.7.1.	L3e	Vehicle is equipped to be driven in right/ left-hand traffic and in countries that use metric/metric and imperial units (4)	:	Both right and left hand traffic and metric and imperial units
1.8.		**Propulsion unit performance**		
1.8.1.	L3e, L4e, L5e, L7e-A, L7e-B2	Declared maximum vehicle speed	:	85 km/h
1.8.2.	L1e, L2e, L6e, L7e-B1, L7e-C	Maximum design vehicle speed (22)	:	n.a.
1.8.3.	L3e	Maximum net power combustion engine	:	6.3 kW at 7500 min^{-1} at A/F ratio:14.7±0.5
1.8.4.	L3e	Maximum net torque combustion engine	:	9.3 Nm at 5000 min^{-1} at A/F ratio:14.7±0.5

tem No	(Sub) categories	Detailed information		
1.8.5.	L3e	Maximum continuous-rated power electric motor (15/30 (4) minutes power (27))	:	n.a.
1.8.6.	L3e	Maximum continuous-rated torque electric motor	:	n.a.
1.8.7.	L3e	Maximum continuous total power for propulsion(s)	:	n.a.
1.8.8.	L3e	Maximum continuous total torque for propulsion(s)	:	n.a.
1.8.9.	L3e	Maximum peak power for propulsion(s)	:	n.a.
2.		**MASSES AND DIMENSIONS** (In kg and mm.) refer to drawings where applicable		
2.1.		**Range of vehicle mass (overall)**		
2.1.1.	L3e	Mass in running order	:	110 kg
2.1.1.1.	L3e	Distribution of mass in running order between the axles	:	Front: 49 kg Rear: 61 kg
2.1.2.	L3e	Actual mass	:	185 kg
2.1.2.1.	L3e	Distribution of actual mass between the axles	:	Front:74 kg Rear: 111 kg
2.1.3.	L3e	Technically permissible maximum laden mass	:	300 kg
2.1.3.1.	L3e	Technically permissible maximum mass on front axle	:	120 kg
2.1.3.2.	L3e	Technically permissible maximum mass on rear axle	:	180 kg
2.1.3.3.	L4e	Technically permissible maximum mass on sidecar axle	:	n.a.
2.1.4.	L3e	Maximum hill-starting ability at the maximum technically permissible mass declared by the manufacturer	:	30 % slope
2.1.5.	L3e	Maximum pay mass declared by manufacturer	:	115 kg
2.1.6.	L3e	Safe load carrying capacity of load platform declared by manufacturer	:	n.a.
2.1.7.	L3e	Technically permissible maximum towable mass in case of (4)	:	n.a.
2.1.7.1.	L3e	Technically permissible maximum laden mass of the combination	:	n.a.
2.1.7.2.	L3e	Technically permissible maximum mass at the coupling point	:	n.a.
2.1.8.	L3e	Mass of the optional equipment	:	n.a.
2.1.9.	L3e	Mass of the superstructure	:	n.a.
2.1.10.	L3e	Mass of the propulsion battery	:	n.a.
2.1.11.	L2e, L4e, L5e, L6e, L7e	Mass of the doors	:	n.a.
2.1.12.	L2e-U, L5e-B, L6e-BU, L7e-CU	Mass of the machines or equipment installed on the load platform area	:	n.a.
2.1.13.	L3e	Mass of the gaseous fuel system as well as storage tanks for gaseous fuel	:	n.a.
2.1.14.	L3e	Mass of the storage tanks to store compressed air	:	n.a.
2.2.		**Range of vehicle dimensions (overall)**		
2.2.1.	L3e	Length	:	1915 mm

tem No	(Sub) categories	Detailed information		
2.2.2.	L3e	Width	:	720 mm
2.2.3.	L3e	Height	:	1010 mm
2.2.4.	L3e	Wheelbase	:	1245 mm
2.2.4.1.	L4e	Wheelbase sidecar (28)	:	n.a.
2.2.5.		Track width	:	n.a.
2.2.6.	L7e-B	Front overhang	:	n.a.
2.2.7.	L7e-B	Rear overhang	:	n.a.
2.2.8.		Load platform dimensions	:	n.a. (only for L2e-U, L5e-B, L6e-BU, L7e-B2, L7e-CU)
2.2.9.		Centre of gravity	:	n.a. (only for L2e-U, L5e-B, L6e-BU, L7e-B2, L7e-CU)
2.2.10.		Miscellaneous dimensions:		
2.2.10.1.	L7e-B2	Approach angle (11)	:	n.a.
2.2.10.2.	L7e-B2	Departure angle (11)	:	n.a.
2.2.10.3.	L7e-B2	Ramp angle (11)	:	n.a.
2.2.10.4.	L7e-B2	Ground clearance under the front axle (11)	:	n.a.
2.2.10.5.	L7e-B2	Ground clearance under the rear axle (11)	:	n.a.
2.2.10.6.		Ground clearance between the axles (11)	:	n.a. (only for L3e-AxE(x=1, 2 or 3), L3e-AxT (x=1, 2 or 3) , L7e-B)
2.2.10.7.	L7e-B	Wheelbase to ground clearance ratio	:	n.a.
2.2.10.8.	L7e-B2	Static stability coefficient –Kst	:	n.a.
2.2.10.9.	L3e-A_XE, L3e-AxT	Seat height	:	n.a.
2.2.10.10.	L3e-A_XE, L3e-AxT	Ground clearance	:	n.a.
3.		**GENERAL POWERTRAIN CHARACTERISTICS**		
3.1.		**Manufacturer of the propulsion unit**		
3.1.1.		*Combustion engine*		
31.1.1.	L3e	Manufacturer	:	Chongqing Yinxiang Motorcycle Group Co., Ltd.
3.1.1.2.	L3e	Engine code (as marked on the engine or other means of identification)	:	153FMI
3.1.1.3.	L3e	Fuel identification marking (if available)	:	n.a.
3.1.2.		*Electric motor*	:	n.a.
3.2.		**Combustion engine**		
3.2.1.		*Specific engine information*		
3.2.1.1.	L3e	Number of combustion engines	:	1
3.2.1.2.	L3e	Working principle:	:	internal combustion engine (ICE)/positive ignition/ ~~compression ignition/external combustion engine ECE)/turbine/compressed air~~ (4)
3.2.1.3.	L3e	Cycle:	:	four-stroke~~/two-stroke/rotary/other~~ (4)
3.2.1.4.	L3e	Cylinders		
3.2.1.4.1.	L3e	Number	:	1
3.2.1.4.2.	L3e	Arrangement (26)	:	Horizontal, S
3.2.1.4.3.	L3e	Bore (12)	:	Ø52.4 mm
3.2.1.4.4.	L3e	Stroke (12)	:	57.8 mm
3.2.1.4.5.	L3e	Number and configuration of stators in the case of rotary-piston engine	:	n.a.
3.2.1.4.6.	L3e	Volume of combustion chambers in the case of rotary-piston engine	:	n.a.
3.2.1.4.7.	L3e	Firing order	:	n.a.
3.2.1.5.	L3e	Engine capacity (6)	:	125 cm^3 (Calculated 124.6 cm^3)
3.2.1.6.	L3e	Volumetric compression ratio (7)	:	9.2 :1
3.2.1.7.	L3e	Number and minimum cross-sectional areas of inlet and outlet ports		
* 3.2.1.7.1.	L3e		:	572 mm^2 at the inlet of the cylinder head 415 mm^2 at the outlet of the cylinder head

tem No	(Sub) categories	Detailed information		
* 3.2.1.7.2.	L3e	Valve timing or equivalent data	:	Refer to drawing No. Cub pro 125-21
* 3.2.1.7.3.	L3e	Maximum lift of valves, angles of opening and closing, or timing details of alternative distribution systems, in relation to dead centres. For variable timing system, minimum and maximum timing	:	Refer to drawing No. Cub pro 125-21
* 3.2.1.7.4.	L3e	Reference and/or setting ranges (4)	:	Inlet: 4.37 mm Exhaust: 4.24 mm
3.2.1.8.	L3e	Drawings of combustion chamber, cylinder head, piston, piston rings	:	Refer to drawing No. Cub pro 125-02, Cub pro 125-03, Cub pro 125-04, Cub pro 125-05, Cub pro 125-06, Cub pro 125-07
3.2.1.9.	L3e	Normal warm engine idling speed	:	1500±100 min^{-1}
3.2.1.10.	L3e	Stop-start system	:	no
* 3.2.2.		*Powertrain/propulsion/drive-train management system*		
3.2.2.1.	L3e	~~PCUs~~/ECUs (4) software identification number(s) and calibration verification number(s)	:	Make: UAES Type: MSE8.0 Software identification No.: CUB_PRO_T125 Calibration verification No.: ED110951
3.2.3.		*Fuel*		
3.2.3.1.	L3e	Fuel type (9)	:	P or E5 (petrol E5)
3.2.3.2.	L3e	Vehicle fuel configuration	:	mono-fuel/~~bio-fuel/flex-fuel~~ (4)
3.2.3.2.1.	L3e	Maximum amount of bio-fuel acceptable in fuel	:	n. a.
3.2.4.		*Fuel pressure delivery and control*		
3.2.4.1.	L3e	Brief description and schematic drawing of low-and/or high-pressure fuelling wet system(s) (4)	:	Refer to drawing No. Cub pro 125-11
3.2.4.2.	L3e	Low- and/or high-pressure fuel pump(s)	:	yes/~~no~~
3.2.4.2.1.	L3e	Fuel pump control:	:	~~mechanical/on/off electric~~/continuous operation/ ~~electronically controlled variable operation~~ (4)
3.2.4.2.2.	L3e	For CI combustion engines and dual fuel engines only maximum fuel delivery (4) (7)	:	n.a.
3.2.4.3.	L3e	Common rail	:	~~yes~~/no
3.2.4.4.	L3e	Fuel distributor/rail/hoses (4)	:	yes/~~no~~
3.2.4.5.	L3e	Fuel pressure and/or fuel flow regulator(s)	:	yes/~~no~~
3.2.5.		*Fuel mass metering and control*		
3.2.5.1.	L3e	By carburettor(s)	:	~~yes~~/no (4)
3.2.5.2.	L3e	By mechanically/hydraulically controlled fuel injection (4)	:	no
3.2.5.2.1.	L3e	Operation principle	:	n.a.
3.2.5.2.2.	L3e	Mechanical/electronic (4) adjustment of maximum fuel mass delivery	:	n.a.
3.2.5.3.	L3e	By electronically controlled fuel injection system	:	yes/~~no~~
3.2.5.3.1.	L3e	Operation principle: port injection/direct injection/pre-chamber/swirl chamber (4)	:	Port injection/~~direct injection/pre-chamber/swirl chamber~~
3.2.5.3.2.	L3e	Fuel injector(s)	:	single/~~multi-point/direct injection/other~~ (specify) (4)
3.2.5.3.3.	L3e	Total and per cylinder amount of fuel injectors	:	1
3.2.5.4.	L3e	Air-assisted fuel injector	:	~~yes~~/no (4)

tem No	(Sub) categories	Detailed information		
3.2.5.4.1.	L3e	Description and operating pressure of air-assist	:	n.a.
3.2.5.5.	L3e	Cold start system	:	yes/~~no~~ (4)
3.2.5.5.1.	L3e	Description of cold start system	:	Control by ECU
3.2.5.6.	L3e	Auxiliary starting aid	:	~~yes~~/no (4)
3.2.5.7.	L3e	CI injection specific	:	~~yes/~~no (4)
3.2.5.7.1.	L3e	Static injection timing (7)	:	n.a.
3.2.5.7.2.	L3e	Injection advance curve (7)	:	n.a.
3.2.6.	L3e	*Gaseous fuelling system and control*		
3.2.6.1.	L3e	Brief description and schematic drawing of gaseous fuelling system(s)	:	n.a.
3.2.6.2.	L3e	Liquefied petroleum gas (LPG) fuelling system	:	n.a.
3.2.6.3.	L3e	Natural gas (NG) fuelling system	:	n.a.
3.2.6.4.	L3e	Gaseous fuel: LPG/NG-H/NG-L/ NG-HL (4)	:	n.a.
3.2.6.5.	L3e	NG fuel-specific equipment	:	n.a
3.2.6.6.	L3e	Hydrogen fuel-specific equipment	:	n.a
3.2.6.7.	L3e	H_2NG fuelling system	:	n.a
3.2.7.		*Air-induction system*		
3.2.7.1.	L3e	Brief description and schematic drawing of gaseous intake air-flow and induction system	:	Refer to drawing No. Cub pro 125-14
3.2.7.2.	L3e	Intake manifold description and working principle (e.g. fixed length/variable length/swirl valves) (4) (include detailed drawings and/or photos)	:	fixed length Refer to drawing No. Cub pro 125-15
* 3.2.7.2.1.	L3e	Description and drawings of inlet pipes and their accessories (plenum chamber, heating device with control strategy, additional air intakes, etc.)	:	Refer to drawing No. Cub pro 125-15
3.2.7.3.	L3e	Intake air pressure charger	:	~~yes/~~no (4)
3.2.7.4.	L3e	Waste gate	:	~~yes~~/no (4)
3.2.7.5.	L3e	Intercooler	:	~~yes/~~no (4)
3.2.7.6.	L3e	Air filter, (drawings, photographs)	:	Refer to drawing No. Cub pro 125-16
3.2.7.7.	L3e	Intake air-silencer description (drawings, photographs)	:	Refer to drawing No. Cub pro 125-16
* 3.2.7.7.1.	L3e	Working principle	:	Reduce air flow velocity
3.2.8.		*Air-mass metering and control*		
3.2.8.1.	L3e	Brief description and schematic drawing of air-mass metering and control system	:	By manifold absolute pressure sensor and intake air temperate sensor Refer to drawing No. Cub pro 125-16
3.2.8.2.	L3e	Mechanical throttle body	:	yes/~~no~~
3.2.8.3.	L3e	Electronic throttle control (ETC)	:	~~yes~~/no
3.2.9.		*Spark delivery system and control*		
3.2.9.1.	L3e	Brief description and schematic drawing of spark delivery and control system	:	Refer to drawing No. Cub pro 125-10, Cub pro 125-56, Cub pro 125-58
3.2.9.1.1.	L3e	Working principle	:	Refer to drawing No. Cub pro 125-56
3.2.9.1.2.	L3e	Ignition advance curve or map (7) at wide open throttle	:	Refer to drawing No. Cub pro 125-10
3.2.9.1.3.	L3e	Static ignition timing (7)	:	n.a.
3.2.9.2.	L3e	Ion sense capability	:	no

tem No	(Sub) categories	Detailed information		
3.2.9.3.	L3e	Spark plugs:	:	NGK CP6EA9
3.2.9.3.1.	L3e	Gap setting	:	0.6~0.7 mm
3.2.9.4.	L3e	Ignition coil(s)	:	Refer to drawing No. Cub pro 125-58
* 3.2.9.4.1.	L3e	Working principle	:	Refer to drawing No. Cub pro 125-56
* 3.2.9.4.2.	L3e	Dwell angle and timing at wide open throttle	:	n.a.
3.2.10.		*Powertrain cooling system and control*		
3.2.10.1.	L3e	Brief description and schematic drawing of powertrain cooling and control system	:	n.a.
3.2.10.2.	L3e	Cooling system: liquid	:	~~yes~~/no (4)
3.2.10.2.1.	L3e	Maximum temperature at outlet	:	n.a.
3.2.10.2.2.	L3e	Nominal setting of the engine temperature control mechanism	:	n.a.
3.2.10.2.3.	L3e	Nature of liquid	:	n.a.
3.2.10.2.4.	L3e	Circulating pump(s):	:	~~yes~~/no (4)
3.2.10.2.4.1.	L3e	Characteristics	:	n.a.
3.2.10.3.	L3e	Air cooling	:	yes/~~no~~
3.2.10.3.1.	L3e	Reference point	:	n.a.
3.2.10.3.2.	L3e	Maximum temperature at reference point	:	n.a.
3.2.10.3.3.	L3e	Fan	:	no
3.2.11.		*Powertrain lubrication system and control*		
3.2.11.1.	L3e	Brief description and schematic drawing of powertrain lubrication and control system	:	Forced circulation & splashing Refer to drawing No. Cub pro 125-23
3.2.11.2.	L3e	Lubrication system configuration(s)	:	(wet sump, ~~dry sump, other, pump/ injection into induction system/mixed with the fuel, etc.~~) (4)
3.2.11.3.	L3e	Location of oil reservoir (if any):	:	Bottom of the engine crankcase
3.2.11.4.	L3e	Feed system	:	pump/~~injection into induction system/mixed with the fuel, etc.~~(4)
3.2.11.5.	L3e	Lubricating pump	:	yes/~~no~~ (4)
3.2.11.6.	L3e	Oil cooler	:	~~yes/~~no (4)
3.2.11.6.1.	L3e	Drawing	:	Refer to drawing No. Cub pro 125-23
3.2.11.7.	L3e	Lubricant(s) characteristics	:	SF 10W/30(winter) SF 15W/40(summer)
3.2.11.8.	L3e	Lubricant mixed with the fuel	:	no (4)
3.2.11.8.1.	L3e	Percentage range of lubricant mixed with the fuel	:	n.a.
3.2.12.		*Exhaust system and control*		
3.2.12.1.	L3e	Brief description and schematic drawing of exhaust devices for noise and tailpipe emission control	:	Refer to drawing No. Cub pro 125-17
3.2.12.2.	L3e	Description and drawing of the exhaust manifold	:	refer to drawing No. Cub pro 125-18
3.2.12.3.	L3e	Description and detailed drawing of the exhaust device	:	refer to drawing No. Cub pro 125-18, Cub pro 125-19
3.2.12.4.	L3e	Maximum permissible exhaust back-pressure at rated engine speed and at 100 % load	:	n.a.(for compression ignition engine only)
3.2.12.5.	L3e	Type, marking of exhaust noise-abatement device(s)	:	refer to drawing No. Cub pro 125-17, Cub pro 125-18

tem No	(Sub) categories	Detailed information		
* 3.2.12.6.	L3e	Noise-reducing measures in the engine compartment and on the engine where relevant for external noise	:	n.a.
3.2.12.7.	L3e	Location of the exhaust outlet	:	refer to drawing No. Cub pro 125-18
3.2.12.8.	L3e	Exhaust noise-abatement device containing fibrous materials	:	~~yes/~~no (4)
3.2.13.		*Other electrical systems and control than those intended for the electrical propulsion*		
3.2.13.1.	L3e	Rated voltage	:	12V, ~~positive~~/negative ground (4)
3.2.13.2.	L3e	Generator	:	yes~~/no~~ (4)
3.2.13.2.1.	L3e	Nominal output	:	200W
3.2.13.3.	L3e	Battery(ies)	:	yes~~/no~~ (4)
3.2.13.3.1.	L3e	Capacity and other characteristics (mass …)	:	12V/4Ah, around 1.45kg
3.2.13.4.	L3e	Electric heating systems for the passenger compartment	:	~~yes/~~no (4)
3.3.		Pure electric and hybrid electric propulsion and control	:	n.a.
3.4.		**Other engines, electric motors or combinations (specific information concerning the parts of these motors)**）	:	n.a.
3.5.		**Drive-train and control** (13)		
3.5.1.	L3e	Brief description and schematic drawing of the vehicle drive-train and its control system (gear shift control, clutch control or any other element of drive-train)	:	Refer to drawing No. Cub pro 125-24
3.5.2.		*Clutch*		
3.5.2.1.	L3e	Brief description and schematic drawing of the clutch and its control system	:	Wet type, multi-piece, Refer to drawing No. Cub pro 125-24
3.5.3.		*Transmission*		
3.5.3.1.	L3e	Brief description and schematic drawing of gear shift system(s) and its control	:	Refer to drawing No. Cub pro 125-24
3.5.3.2.	L3e	Drawing of the transmission	:	Refer to drawing No. Cub pro 125-24
3.5.3.3.	L3e	Type	:	mechanical, ~~hydraulic, electric, manual/manual automated/automatic~~/CVT/~~other (indicate)~~) (4)
3.5.3.4.	L3e	A brief description of the electrical/ electronic components (if any)	:	n.a.
3.5.3.5.	L3e	Location relative to the engine	:	Outside of left crank case
3.5.3.6.	L3e	Method of control	:	By foot
3.5.4.	L3e	*Gear ratios*		
		Overview gear ratios	:	

e13*168/2013*01827*00
Société Nationale de Certification et d'Homologation

Gear[24]	Internal transmission ratio (ratio of engine to transmission output shaft revolutions)	Final drive ratio(ratio of transmission output shaft to driven wheel revolutions)	Total gear ratio	Ratio(engine speed, vehicle speed) for manual transmission only
1	8.375	2.714	22.729	210.45
2	5.192	2.714	14.091	130.47
3	3.852	2.714	10.454	96.79
4	3.092	2.714	8.391	77.69
Reverse	Not applicable	Not applicable	Not applicable	Not applicable

3.6.		**Safe-cornering device**		
3.6.1.		Safe-cornering device (Annex VIII to Regulation (EU) No 168/2013	:	~~yes/~~no (only for L3e, equipped with twinned wheels, L2e, L5e, L6e, L7e)
3.6.2.		Differential lock	:	~~yes/~~no~~/optional~~(only for L3e,equipped with twinned wheels,L2e, L5e,L6e, L7e)
3.6.3.	L3e	Brief description and schematic drawing of the safe-cornering device, the differential lock and their control systems	:	n.a.
3.7.		**Suspension and control**		
3.7.1.	L3e	Brief description and schematic drawing of suspension and its control system	:	Refer to drawing No. Cub pro 125-26, Cub pro 125-27
3.7.2.	L3e	Drawing of the suspension arrangements	:	Refer to drawing No. Cub pro 125-26, Cub pro 125-27
3.7.3.	L3e	Level adjustment	:	no
3.7.4.	L3e	Brief description of the electrical/ electronic components	:	n.a.
3.7.5.	L3e	Stabilisers	:	~~yes/~~no~~/optional~~
3.7.6.	L3e	Shock absorbers	:	yes/~~no/optional~~
3.8.		Passenger-compartment heating system and air-conditioning	:	n.a.
3.9.		Cycles designed to pedal	:	n.a.
4.		**GENERAL INFORMATION ON ENVIRONMENTAL AND PROPULSION PERFORMANCE**		
4.0.		**General information on environmental and propulsion performance**		
4.0.1.	L3e	Environmental step [16]	:	Euro (~~3/4/~~5/~~5+~~) [4]
4.0.2.	L3e	Fuel consumption (provide details for each reference fuel tested)	:	2.7 L/100km
4.0.3.	L3e	CO2 emission	:	46 g/km
4.0.4.	L3e	Energy consumption	:	N/A
4.0.5.	L3e	Electric range	:	N/A
4.1.		Tailpipe emission-control system		
4.1.1.	L3e	Brief description and schematic drawing of the tailpipe emission-control system and its control	:	Refer to drawing No. Cub pro 125-18, Cub pro 125-19
4.1.2.		*Catalytic converter*		
4.1.2.1.	L3e	Configuration, number of catalytic converters and elements (information to be provided for each separate unit)	:	2 elements
4.1.2.2.	L3e	Drawing with dimensions, shape and volume of the catalytic converter(s)	:	refer to drawing No. Cub pro 125-19
4.1.2.3.	L3e	Catalytic reaction	:	3 way catalytic converter
* 4.1.2.4.	L3e	Total charge of precious metals	:	Front : 90 g/ft^3, Rear: 40 g/ft^3
* 4.1.2.5.	L3e	Relative concentration	:	Front: Pt:Pd:Rh=10:10:1 Rear: Pt:Pd:Rh=5:5:1
* 4.1.2.6.	L3e	Substrate (structure and material)	:	Honeycomb; Pt& Pd& Rh

* 4.1.2.7.	L3e	Cell density	:	Front: 200 cpsi Rear: 300 cpsi
* 4.1.2.8.	L3e	Casing for the catalytic converter(s)	:	fill-in type
4.1.2.9.	L3e	Location of the catalytic converter(s) (place and reference distance in the exhaust line)	:	refer to drawing No. Cub pro 125-18
4.1.2.10.	L3e	Catalyst heat-shield	:	~~yes/~~no (4)
4.1.2.11.	L3e	Brief description and schematic drawing of the regeneration system/ method of exhaust after-treatment systems and its control system	:	n.a.
4.1.2.12.	L3e	Identifying part number	:	n.a.
4.1.3.		*Oxygen sensor(s)*		
4.1.3.1.	L3e	Oxygen sensor component(s) drawing(s)	:	Refer to drawing No. Cub pro 125-20
4.1.3.2.	L3e	Drawing of exhaust device with oxygen sensor location(s) (dimensions relative to exhaust valves	:	Refer to drawing No. Cub pro 125-20
4.1.3.3.	L3e	Control range(s)	:	0~900 mV
4.1.3.4.	L3e	Identifying part number(s)	:	0258020001
4.1.3.5.	L3e	Description of oxygen sensor heating system and heating strategy	:	Ecu detects oxygen concentration by O2 sensor to decide the amount of injecting fuel matching the environment specification
4.1.3.6.		Oxygen sensor heat shield(s)	:	yes/~~no~~
4.1.4.	L3e	*Secondary air-injection (air-inject in exhaust)*	:	n.a.
4.1.5.		*External exhaust gas recirculation (EGR)*	:	n.a.
4.1.6.		*Particulate filter*	:	n.a.
4.1.8.		*additional tailpipe emission-control devices (if any not covered under another heading)*		
4.1.8.1.	L3e	Working principle	:	n.a.
4.2.		**Crankcase emission control system**		
4.2.1.	L3e	Configuration of crank-case gas recycling system (breather system, positive crank-case ventilation system, other) (4) (description and drawings)	:	Refer drawing No. Cub pro 125-22
4.3.		**Evaporative emission control system**		
4.3.1.	L3e	Evaporative emissions control system	:	yes/~~no~~ (4)
4.3.2.	L3e	Drawing of the evaporative control system	:	Refer to drawing No. Cub pro 125-56
4.3.3.	L3e	Drawing of the canister (including dimensions and indicating vent and purge mechanism)	:	Refer to drawing No. Cub pro 125-57
4.3.4.	L3e	Working capacity	:	Refer to drawing No. Cub pro 125-57
4.3.5.	L3e	adsorption material	:	Activated carbon
4.3.6.	L3e	Housing material	:	NBR+PVC
4.3.7.	L3e	Schematic drawing of the fuel tank, indicating capacity and material	:	Refer to drawing No. Cub pro 125-08
4.3.8.	L3e	Drawing of the heat-shield between tank and exhaust device	:	n.a.
4.4.		**additional information on environmental and propulsion unit performance**		
4.4.1.	L3e	Description and/or schematic drawings of additional pollution-control devices	:	n.a.
4.4.2.	L3e	Location of the coefficient of absorption symbol (compression-ignition engines only)	:	n.a.

4.4.3.	L3e	Applicable information document set out in respectively UN Regulation No 9, 41 or 63 shall supplement this information document with regard to the sound level	:	n.a.
4.4.4.	L3e	Applicable information document set out in respectively UN Regulation No 92 shall supplement this information document with regards to the noise-abatement devices installed on the vehicle	:	n.a.
5.		**VEHICLE PROPULSION FAMILY**		
5.1.	L3e	To define the vehicle propulsion family, the manufacturer shall submit the information required for classification criteria set out in point 3 of Annex XI to Commission Delegated Regulation	:	n.a.
6.		**INFORMATION ON FUNCTIONAL SAFETY**		
6.1.		**Audible warning devices**		
6.1.1.	L3e	Summary description of device(s) used and their purpose	:	One Electro-magnetic horn with resonator disc, single-tone warning
6.1.2.	L3e	Drawing(s) showing the location of the audible warning device(s) in relation to the structure of the vehicle	:	Refer to drawing No. Cub pro 125-45
6.1.3.	L3e	Details of the method of attachment, including the part of the vehicle structure to which the audible warning device(s) is (are) attached	:	Attachment by bolt on the front cover stay, Refer to drawing No. Cub pro 125-45
6.1.4.	L3e	Electrical/~~pneumatic~~ circuit diagram	:	Elecrical, Refer to drawing No. Cub pro 125-46
6.1.4.1.	L3e	Voltage	:	~~AC/~~DC (4)
6.1.4.2.	L3e	Rated voltage or pressure	:	12V
6.1.5.	L3e	Drawing of the mounting device	:	Refer to drawing No. Cub pro 125-45
6.2.		**Braking, including anti-lock and combined braking systems**		
6.2.1.	L3e	Characteristics of the brakes, including details and drawings of the drums, discs, hoses, make and type of shoe/pad assemblies and/or linings, effective braking areas, radius of drums, shoes or discs, mass of drums, adjustment devices, relevant parts of the axle(s) and suspension, levers, pedals (4)	:	Refer to drawing No. Cub pro 125-29, Cub pro 125-30, Cub pro 125-31, Cub pro 125-32, Cub pro 125-33, Cub pro 125-34, Cub pro 125-35, Cub pro 125-36
6.2.2.	L3e	Operating diagram, description and/or drawing of the braking system, including details and drawings of the transmission and controls as well as a brief description of the electrical and/or electronic components used in the braking system (4)	:	Refer to drawing No. Cub pro 125-29, Cub pro 125-30, Cub pro 125-31, Cub pro 125-32, Cub pro 125-33, Cub pro 125-34, Cub pro 125-35, Cub pro 125-36
6.2.2.1.	L3e	Front, rear and sidecar brakes, disc and/or drum (4)	:	Front : Disc; Rear: Drum
6.2.2.2.	L3e	Parking braking system	:	n.a.
6.2.2.3.	L3e	Any additional braking system	:	n.a.
6.2.3.	L3e	Vehicle is equipped to tow a trailer with no brake/overrun brake/electric/ pneumatic/hydraulic service brakes	:	n.a.
6.2.4.	L3e	Anti-lock/Combined braking system		
6.2.4.1.	L3e	Anti-lock braking system	:	yes/~~no/optional~~ (4)
6.2.4.2.	L3e	Combined braking system	:	~~yes/~~no/~~optional~~ (4)
6.2.4.3.	L3e	Anti-lock and combined braking system	:	~~yes~~/no/~~optional~~ (4)
6.2.4.4.	L3e	Schematic drawing(s)	:	Refer to drawing No. Cub pro 125-36

6.2.5.	L3e	Hydraulic reservoir(s) (volume and location)	:	Refer to drawing No. Cub pro 125-35
6.2.6.	L3e	Particular characteristics of the braking system(s)		
6.2.6.1.	L3e	Brake shoes and/or pads (4)	:	Refer to drawing No. Cub pro 125-31, Cub pro 125-32
6.2.6.2.	L3e	Linings and/or-pads (indicate make, type, grade of material or identification mark)	:	Refer to drawing No. Cub pro 125-31, Cub pro 125-32
6.2.6.3.	L3e	Brake levers and/or pedals (4)	:	Refer to drawing No. Cub pro 125-34
6.2.6.4.	L3e	Other devices (where applicable)	:	n.a.
6.3.		**Electrical safety**	:	n.a.
6.4.		**Front and rear protective structures**	:	n.a.
6.5.	L2e, L5e, L6e, L7e	**Glazing, windscreen wipers and washers, and defrosting and demisting systems**	:	n.a.
6.6.	L2e, L5e, L6e, L7e	**Windscreen wiper(s)**	:	n.a.
6.7	L2e, L5e, L6e, L7e	**Windscreen washer**	:	n.a.
6.8.	L2e, L5e, L6e, L7e	**Defrosting and demisting**	:	n.a.
6.9.		**Driver-operated controls including identification of controls, tell- tales and indicators**		
6.9.1.	L3e	Arrangement and identification of controls, tell-tales and indicators	:	Refer to drawing No. Cub pro 125-37, Cub pro 125-37-2, Cub pro 125-38, Cub pro 125-38-2, Cub pro 125-39, Cub pro 125-40
6.9.2.	L3e	Photographs and/or drawings of the arrangement of symbols and controls, tell-tales and indicators	:	Refer to drawing No. Cub pro 125-41
6.9.3.	L3e	Controls, tell-tales and indicators for which, when fitted, identification is mandatory, including the identification symbols to be used for that purpose	:	Refer to drawing No. Cub pro 125-41

e13*168/2013*01827*00
Société Nationale de Certification et d'Homologation

6.9.4.	L3e	Summary table: the vehicle is equipped with the following driver-operated controls, including indicators and tell-tales (4)

Controls, tell-tales and indicators for which, when fitted, identification is mandatory, and symbols to be used for that purpose

symbol No	Device	Control/ indicator available (+)	Identified by symbol (+)	Where (++)	Tell-tale available (+)	Identified by Symbol (+)	Where (++)
1	Master light	-	-	-	-	-	-
2	Dipped-beam head lamps	X	X	c	-	-	-
3	Main-beam head lamps	X	X	c	X	X	d
4	Position(side) lamps	-	-	-	-	-	-
5	Front fog Lamp	-	-	-	-	-	-
6	Rear fog Lamps	-	-	-	-	-	-
7	Headlamp Levelling device	X	-	-	-	-	-
8	Parking Lamps	-	-	-	-	-	-
9	Direction Indicators	X	X	c	X	X	d
10	Hazard Warning	X	X	c	X	X	d
11	Windscreen Wiper	-	-	-	-	-	-
12	Windscreen Washer	-	-	-	-	-	-
13	Windscreen wiper and washer	-	-	-	-	-	-
14	Headlamp cleaning device	-	-	-	-	-	-
15	Windscreen demisting and defrosting	-	-	-	-	-	-
16	Rear window demisting and defrosting	-	-	-	-	-	-
17	Ventilating fan	-	-	-	-	-	-
18	Diesel pre-heat	-	-	-	-	-	-
19	Choke	-	-	-	-	-	-
20	Brake failure	-	-	-	X	X	d
21	Fuel level	-	-	-	X	X	d
22	Battery charging condition	-	-	-	-	-	-
23	Engine coolant temperature	-	-	-	X	X	d
24	Malfunction Indicator light (MI)	-	-	-	X	X	d

(+) x = Yes.
\- = No or not separately available.
o = Optional.
(++) d = Directly on control, indicator or tell-tale.
c = In close vicinity.

e13*168/2013*01827*00
Société Nationale de Certification et d'Homologation

6.9.5.	L3e	**Controls, tell-tales and indicators for which, when fitted, identification is optional, and Symbols which shall be used if they are to be identified**							
		Symbol No	Device	Control/ indicator available (+)	Identified By Symbol (+)	Where (++)	Tell-tale available (+)	Identified By Symbol (+)	Where (++)
		1	Parking brake	-	-	-	-	-	-
		2	Rear window wiper	-	-	-	-	-	-
		3	Rear window washer	-	-	-	-	-	-
		4	Rear window wiper and washer	-	-	-	-	-	-
		5	Intermittent Windscreen wiper	-	-	-	-	-	-
		6	Audible warning device (horn)	X	X	c	-	-	-
		7	Front hood (bonnet)	-	-	-	-	-	-
		8	Rear hood (boot)	-	-	-	-	-	-
		9	Seat belt	-	-	-	-	-	-
		10	Engine oil Pressure	-	-	-	-	-	-
		11	Unleaded petrol	-	-	-	-	-	-
		(+) x = Yes. - = No or not separately available. o = Optional. (++) d = Directly on control, indicator or tell-tale. c = In close vicinity.							

e13*168/2013*01827*00
Société Nationale de Certification et d'Homologation

6.10.		**Speedometer and odometer**		
6.10.1.		*Speedometer*		
6.10.1.1.	L3e	Photographs and/or drawings of the complete system	:	Refer to drawing No. Cub pro 125-25
6.10.1.2.	L3e	Vehicle speed range displayed	:	0~199 km/h, 0-123mph
6.10.1.3.	L3e	Tolerance of the measuring mechanism of the speedometer	:	+4km/h
6.10.1.4.	L3e	Technical constant of the speedometer	:	PPK:1645
6.10.1.5.	L3e	Method of operation and description of the drive mechanism	:	Step motor, frequentative signal(from speed sensor at the front wheel)-->cpu, calculate frequency-->voltage output-->step motor to drive pointer
6.10.1.6.	L3e	Overall transmission ratio of the drive mechanism	: :	Tyre size:110/70-17 2 signals/wheel revolution
6.10.2.		*Odometer*		
6.10.2.1.	L3e	Tolerance of the measuring mechanism of the odometer	:	0~5%
6.10.2.2.	L3e	Method of operation and description of the drive mechanism	:	Step motor, frequentative signal(from speed sensor at the front wheel)-->cpu, calculate frequency and distance-->LCD display
6.11.		**Installation of lighting, light-signalling devices, including automatic switching of lighting**		
6.11.1.	L3e	List of all devices (mentioning the number, make(s),type, component type-approval mark(s), the maximum intensity of the main-beam headlamps, colour, the corresponding tell-tale)	:	List as below

Lamp function	QTY.	Color	Tell-tale	Max. intensity	Make	Type	Approval Number
High beam Low beam	1	white	/no	28413cd	OH	T125-1	E8*149R00/05*14022*00
Front position lamp	1	White	Panel Lamp	---	OH	T125-1	E8*148R00/04*14022*00
Front direction indicator	2	amber		---	OH	T125-3	E8*148R00/04*14024*00
Rear direction indicator	2	amber		---	OH	T125-4	E8*148R00/04*14025*00
Rear position lamp Stop lamp	1	red	no	---	OH	T125-2	E8*148R00/04*14023*00
Rear registration plate lamp	1	white	no	---	LD	LG201F-HPD	E24*50R00/20*0400*00
Side reflector	2	amber	no	---	FORFREE	FM-RE-01	E13*03R02/17*1774*02
Rear reflector	1	red	no	---	FORFREE	FM-RE-02	E13*03R02/17*1775*02

6.11.2.	L3e	Diagram showing the location of the lighting and light-signalling devices	:	Refer to drawing No. Cub pro 125-37, Cub pro 125-37-2
6.11.3.	L3e	Hazard warning lamps	:	Yes, as direction indicator
6.11.4.	L3e	Brief description of the electrical and/or electronic components used in the lighting system and in the light-signalling system	:	n.a.
6.11.5.	L3e	For every lamp and reflector, supply the following information (in writing and/or by diagram)		
6.11.5.1.	L3e	Drawing showing the extent of the illuminating surface	:	Refer to drawing of lamp approval certificates
6.11.5.2.	L3e	Method used to define the apparent surface in accordance with point 2.10 of UNECE Regulation No 48 (OJ L 323, 6.12.2011, p. 46)	:	Illuminating surface
6.11.5.3.	L3e	Axis of reference and centre of reference	:	Refer to drawing No. Cub pro 125-38, Cub pro 125-38-2, Cub pro 125-39, Cub pro 125-40
6.11.5.4.	L3e	Method of operation of concealable lamps	:	n.a.
6.11.6.	L3e	Description/drawing and type of headlamp levelling device (e.g. automatic, stepwise manually adjustable, continuously manually adjustable) (4)	:	Continuously manually adjustable Refer to drawing No. Cub pro 125-38
6.11.6.1.	L3e	Control device	:	Refer to drawing No. Cub pro 125-38, Cub pro 125-38-2
6.11.6.2.	L3e	Reference marks	:	n.a.
6.11.6.3.	L3e	Marks assigned for loading conditions	:	n.a.
6.12.		**Rearward visibility**		
6.12.1.		*Rear-view mirrors (stating for each mirror)*		
6.12.1.1.	L3e	Drawing(s) for the identification of the mirror showing the position of the mirror relative to the vehicle structure	:	Refer to drawing No. Cub pro 125-48
6.12.1.2.	L3e	Details of the method of attachment including that part of the vehicle structure to which it is attached	:	Refer to drawing No. Cub pro 125-49

6.12.1.3.	L3e	A brief description of the electronic components of the adjustment system	:	n.a.
6.12.2.	L3e	*Devices for indirect vision other than mirrors*		
6.12.2.1.	L3e	Description of the device	:	n.a.
6.12.2.2.	L3e	In the case of a camera-monitor device, the detection distance (mm), contrast, luminance range, glare correction, display performance (black and white/colour (4)), image repetition frequency, luminance reach of the monitor (4)	:	n.a.
6.12.2.3.	L3e	Sufficiently detailed drawings to identify the complete device, including installation instructions; the position for the EU type-approval mark has to be indicated on the drawings	:	n.a.
6.13.		**Rollover protective structure (ROPS)**		
6.13.1.	L7e-B2	Detailed technical description, position, fixing, etc. (including photographs or drawings)	:	n.a.
6.13.2.		*ROPS by Frame (4)*		
6.13.2.1.	L7e-B2	Internal and external dimensions	:	n.a.
6.13.2.2.	L7e-B2	Material(s) and method of construction	:	n.a.
6.13.3.		*ROPS by Cab (4)*		
6.13.3.1.	L7e-B2	Other weather protection arrangements (description)	:	n.a.
6.13.3.2.	L7e-B2	Internal and external dimensions	:	n.a.
6.13.4.		*ROPS by Roll bar(s) mounted at front/rear (4), fold-down/not fold down (4)*		
6.13.4.1.	L7e-B2	Dimensions	:	n.a.
6.13.4.2.	L7e-B2	Material(s) and method of construction	:	n.a.
6.14.		**Safety belts and/or other restraints**	:	n.a.(only for L2e, L4e, L5e-B, L6e-B, L7e)
6.15.		**Safety belt anchorages**		n.a.(only for L2e, L4e, L5e-B, L6e-B, L7e)
6.16.		**Seating positions (saddles and seats)**		
6.16.1.	L3e	Number of seating positions	:	Version1: 1 Version2: 2
6.16.1.1.		Location and arrangement (8)	:	n.a. (only for L2e, L5e,L6e, L7e)
6.16.2.	L3e	Seating position configuration	:	~~seat/~~ saddle (4)
6.16.3.	L3e	Description and drawings of	:	Refer to drawing No. Cub pro 125-52, Cub pro 125-52-1
6.16.3.1.	L3e	The seats and their anchorages	:	n.a.
6.16.3.2.	L3e	The adjustment system	:	n.a.
6.16.3.3.	L3e	The displacement and locking systems	:	n.a.
6.16.3.4.	L3e	The seat-belt anchorages incorporated in the seat structure	:	n.a.
6.16.3.5.	L3e	The parts of the vehicle used as anchorages	:	n.a.
6.16.4.		Coordinates or drawing of the R-point(s) of all seating positions	:	n.a. (only for L2e, L4e, L5e-B, L6e-B, L7e)
6.16.4.1.		Driver's seat	:	n.a. (only for L2e, L4e, L5e-B, L6e-B, L7e)
6.16.4.2.		All other seating positions	:	n.a. (only for L2e, L4e, L5e-B, L6e-B, L7e)
6.16.5.	L3e	Design torso angle	:	n.a.
6.16.5.1.	L3e	Driver's seat	:	n.a.
6.16.5.2.	L3e	All other seating positions	:	n.a.
6.16.6.1.	L3e	Driver's seat	:	n.a.
6.16.6.2.	L3e	All other seating positions	:	n.a.
6.17.		**Steer-ability, cornering properties and turn-ability**		
6.17.1.	L3e	Schematic diagram of steered axle(s) showing steering geometry	:	Refer to drawing No. Cub pro 125-28

6.17.2.		*Transmission and control of steering*		
6.17.2.1.	L3e	Configuration of steering transmission (specify for front and rear)	:	Refer to drawing No. Cub pro 125-28
6.17.2.2.	L3e	Linkage to wheels (including other than mechanical means; specify for front and rear)	:	Refer to drawing No. Cub pro 125-28
6.17.2.2.1.	L3e	A brief description of the electrical/ electronic components	:	n.a.
6.17.2.3.	L3e	Diagram of the steering transmission	:	Refer to drawing No. Cub pro 125-28
6.17.2.4.	L2e, L5e, L6e, L7e	Schematic diagram(s) of the steering control(s)	:	n.a.
6.17.2.5.	L2e, L5e, L6e, L7e	Range and method of adjustment of the steering control(s)	:	n.a.
6.17.2.6.	L2e, L5e, L6e, L7e	Method of assistance	:	n.a.
6.17.3.		*Maximum steering angle of the wheels*		
6.17.3.1.	L3e	To the right	:	39°
6.17.3.2.	L3e	To the left	:	39°
6.18.		**Tyres/wheels combination**		
6.18.1.		*Tyres*		
6.18.1.1.		Size designation		
6.18.1.1.1.	L3e	Axle 1	:	See table 6.18
6.18.1.1.2.	L3e	Axle 2	:	See table 6.18
6.18.1.1.3.	L4e	Sidecar wheel	:	n.a.
6.18.1.2.	L3e	Minimum load-capacity index	:	Front: 35 Rear: 48
6.18.1.3.	L3e	Minimum-speed category Symbol compatible with the theoretical maximum design vehicle speed	:	G
6.18.1.4.	L3e	Tyre pressure(s) as recommended by the vehicle manufacturer	:	See table 6.18
6.18.2.		*Wheels*		
6.18.2.1.	L3e	Rim size(s)	:	See table 6.18
6.18.2.2.	L3e	Categories of use compatible with the vehicle	:	Normal
6.18.2.3.	L3e	Nominal rolling circumference	:	See table 6.18

Table 6.18

No	Tyre size(s)		Rim size(s)	Tyre pressure(s)	Categories	Nominal rolling circumference
1	Front	80/90-17 M/C 44S	Front: 1.85×17 Rear: 2.15×17	Front: 230 kPa Rear: 250 kPa	Normal	1818
	Rear	90/90-17 M/C 49S				1869
2	Front	80/90-17 M/C 50P				1816
	Rear	90/90-17 M/C 49P				1868
3	Front	80/90-17 M/C 44S				1818
	Rear	90/90-17 M/C 49S				1861
4	Front	70/90-17 M/C 38P	Front: 1.4×17 Rear: 1.6×17	Front: 230 kPa Rear: 250 kPa		1759
	Rear	80/90-17 M/C 50P				1810
5	Front	70/90-17 M/C 38P				1742
	Rear	80/90-17 M/C 50P				1816
6	Front	70/90-17 M/C 38S				1751
	Rear	80/90-17 M/C 44S				1818

6.19.		Vehicle maximum speed limitation plate and its location on the vehicle	:	n.a. (only for L7e-B1 and L7e-B2)
6.20.		**Vehicle occupant protection, including interior fittings and vehicle doors**	:	n.a. (only for L2e, L5e-B, L6e-B, L7e)
6.21.		**Maximum continuous total power and/or maximum vehicle speed limitation by design**		
6.21.1.		*Propulsion and/or drive-train output governors*		

6.21.1.1.	L3e	Number (minimum two, exemption L3e-A3 and L4e-A3)	:	2
6.21.1.2.	L3e	How is the redundancy of governors ensured?	:	n.a.
6.21.1.3.	L3e	Nominal cut-off point no 1		
6.21.1.3.1.	L3e	Engine/motor/drive-train rotation speed at which cut-off starts under load	:	10000 rpm
6.21.1.3.2.	L3e	Maximum rotation speed at the minimum engine load	:	10000 rpm
6.21.1.4.	L3e	Nominal cut-off point no 2		
6.21.1.4.1.	L3e	Engine/motor/drive-train rotation speed at which cut-off starts under load (4)	:	10000 rpm
6.21.1.4.2.	L3e	Maximum rotation speed at the minimum engine load	:	10000 rpm
6.21.1.5.	L3e	The stated purpose of governor(s) maximum design vehicle speed limitation/ maximum power limitation/engine over-speed protection (4):	:	n.a.
7.		INFORMATION ON VEHICLE CONSTRUCTION		
7.1.		**Coupling devices and attachments**		
7.1.1.	L3e	L-category vehicle equipped with coupling device	:	~~yes~~/no/~~optional~~ (4)
7.1.2.	L3e	Guidelines and information for consumers in all EU languages regarding the impact on the driveability of using a trailer with an L-category vehicle included in the owner's manual	:	~~yes/~~no (4)
7.1.3.	L3e	For coupling-device approved as separate technical unit: installation and operating instructions added to documentation	:	~~yes/~~no (4)
7.1.4.	L3e	Photographs and/or drawings showing the position and the construction of the coupling-devices	:	n.a.
7.1.5.	L3e	Instructions for attaching the coupling-type to the vehicle and photographs or drawings of the fixing points on the vehicle as stated by the manufacturer; additional information, if the use of the coupling-type is restricted to certain variants or versions of the vehicle type	:	n.a.
7.1.6.	L3e	Attachment points for a secondary coupling and/or breakaway cable (drawings and pictures may be used as appropriate)	:	~~yes/~~no (4)
7.2.		**Devices to prevent unauthorised use**		
7.2.1.		*Protective device*		
7.2.1.1.	L3e	Summary description of protective device(s) used	:	Type 2, Push then counter clock wise to lock, refer to drawing No.Cub pro 125-44
7.2.2.		*Vehicle immobiliser*		
7.2.2.1.	L3e	Technical description of the vehicle immobiliser and of the measures taken against inadvertent activation	:	n.a.
7.2.3.		*Alarm system*		
7.2.3.1.	L3e	Description of the alarm system and of the vehicle parts involved in its installation	:	n.a.
7.2.3.2.	L3e	List of the main components comprising the alarm system	:	n.a.

7.3.		**Electromagnetic compatibility (EMC)**		
7.3.1.	L3e	Requirements under UNECE Regulation No 10 (OJ L 254, 20.9.2012, p. 1) are met with relevant documentation included in the information document UN R10(OJL 254,20.9.2012,P1)	:	yes/~~no~~ (4)
7.3.2.	L3e	Table or drawing of radio-interference control equipment	:	Spark plug cap with resistor and resistor high voltage wire, Refer to drawing No. Cub pro 125-13
7.3.3.	L3e	Particulars of the nominal value of the direct-current resistance, and, in the case of resistive ignition cables, of their nominal resistance per metre	:	Spark plug: 5±0.5 kΩ Spark plug cap: 5±0.5 kΩ
7.4.		**External projections**		
7.4.1.	L3e vehicles with bodywork	General arrangement (drawing or photographs accompanied if necessary by dimensional details and/or text) indicating the position of the attached sections and views, of any parts of the exterior surface which can be regarded as critical for external projections, for example, and where relevant: bumpers, floor line, door and window pillars, air-intake grilles, radiator grille, windscreen wipers, rain gutter channels, handles, slide rails, flaps, door hinges and locks, hooks, eyes, winches, decorative trim, badges, emblems and recesses and any other parts of the exterior surface which can be regarded as critical (e.g. lighting equipment)	:	N.A. (only for vehicle with bodywork)
7.5.		**Fuel storage**		
7.5.1.		*Fuel tank(s)*		
7.5.1.1.		Main fuel tank(s)		
7.5.1.1.1.	L3e	Maximum capacity	:	3.7L±0.2 L
7.5.1.1.2.	L3e	Materials used	:	Steel plate
7.5.1.1.3.	L3e	Fuel tank inlet	:	restricted orifice/~~label~~ (4)
7.5.1.2.		Reserve fuel tank(s)		
7.5.1.2.1.	L3e	Maximum capacity	:	n.a.
7.5.1.2.2.	L3e	Materials used	:	n.a.
7.5.1.2.3.	L3e	Fuel tank inlet	:	n.a.
7.5.1.3.	L3e	Drawing and technical description of the tank(s) with connections and lines of the breathing and venting system, locks, valves, fastening devices	:	Refer to drawing No. Cub pro 125-08
7.5.1.4.	L3e	Drawing clearly showing the position of the tank(s) in the vehicle	:	Refer to drawing No. Cub pro 125-09
7.5.1.5.	L3e	Drawing of the heat shield between tank and exhaust device	:	n.a.
7.5.2.		*Compressed natural gas (CNG) container(s)*	:	n.a.
7.5.3.	L3e	*Liquefied petroleum gas (LPG)container(s)*	:	n.a.
7.6.		**On-board diagnostics (OBD) functional requirements**		
7.6.1.		*On-board diagnostics system*		
7.6.1.1.	L3e	Stage I	:	yes/~~no~~ (4) ~~and/or~~
7.6.1.2.	L3e	Stage II	:	yes/~~no~~(4)

7.6.2.		*OBD system general information*		
7.6.2.1.	L3e-L7e (10)	Written description and/or drawing of the malfunction indicator (MI)	:	Refer to drawing No.Cub pro 125-60
7.6.2.2.	L3e-L7e (10)	List and purpose of all components monitored by the OBD system	:	See table 7.6.2.2
7.6.2.3.	L3e-L7e (10)	Written description (general working principles) for all OBD stage I circuit (open circuit, shorted low and high, rationality) and electronics (PCU/ECU internal and communication) diagnostics	:	OBD Service $03
7.6.2.4.	L3e-L7e (10)	Written description (general working principles) for all OBD stage I diagnostic functionality triggering any operating mode which significantly reduces engine torque in case of fault detection	:	When fault is detected, EMS would use default setting values to calculate intake air mass which is quite different comparing to the real measured value by sensor, this operating mode would cause engine torque reduction. See table 7.6.2.4.
7.6.2.5.	L3e-L7e (10)	Written description of the communication protocol(s) supported	:	ISO 14230-4:2000: 'Road Vehicles — Keyword protocol 2000 for diagnostic systems — Part 4: Requirements for emission-related systems
7.6.2.6.	L3e-L7e (10)	Physical location of diagnostic-connector (add drawings and photographs)	:	Refer to drawing No. Cub pro 125-60
7.6.2.7.	L3e-L7e (10)	Written description in case of voluntary compliance with OBD stage II (general working principles):		
7.6.2.7.1.	L3e-L7e (10)	Positive-ignition engines		
7.6.2.7.1.1.	L3e-L7e (10)	Catalyst monitoring	:	n.a.
7.6.2.7.1.2.	L3e-L7e (10)	Misfire detection	:	OBD Service $03
7.6.2.7.1.3.	L3e-L7e (10)	Oxygen sensor monitoring	:	OBD Service $03
7.6.2.7.1.4.	L3e-L7e (10)	Other components monitored by the OBD system	:	OBD Service $03
7.6.2.7.2.	L3e-L7e (10)	Compression-ignition engines	:	n.a.
7.6.2.7.3.	L3e-L7e (10)	Criteria for MI activation (fixed number of driving cycles or statistical method)	:	n.a.
7.6.2.7.4.	L3e-L7e (10)	List of all OBD output codes and formats used (with explanation of each)	:	n.a.
7.6.3.		*OBD compatibility*		
		The following additional information shall be provided by the vehicle manufacturer to enable the manufacture of OBD-compatible replacement or service parts, diagnostic tools and test equipment:		
7.6.3.1.	L3e-L7e (10)	A comprehensive document describing all sensed components concerned with the strategy for fault detection and MI activation (fixed number of driving cycles or statistical method). This shall, include a list of relevant secondary sensed parameters for each component monitored by the OBD system. The document shall also list all OBD output codes and formats (with an explanation of each) used in association with individual emission- related powertrain components and individual non-emission-related components, where monitoring the component is used to determine MI activation. This shall contain, in particular, a comprehensive explanation for the data given in service $05 Test ID $ 21 to FF and the data given in service $06	:	OBD Service $03 for details of supported itemsService $06

7.6.3.2.	L3e-L7e (10)	For vehicle types using a communication link in accordance with ISO 15765-4 'Road vehicles, diagnostics on controller area network (CAN) — Part 4: requirements for emissions-related systems', the manufacturer shall provide a comprehensive explanation for the data given in service $06 Test ID $00 to FF, for each OBD monitor ID supported	:	OBD Service $06
7.6.3.3.	L3e-L7e (10)	The information required above may be provided in table form as described below.	:	OBD Service $03 and Table 7.6.2.4.
7.6.3.4.	L3e-L7e (10)	Description of ETC diagnostic fault codes	:	n.a.

7.6.4.		*Communication protocol information*		
		The following information shall be referenced to a specific vehicle make, model and variant, or identified using other workable definitions such as VIN or vehicle and systems identification:		
7.6.4.1.	L3e-L7e (10)	Any protocol information system needed to enable complete diagnostics in addition to the standards prescribed in point 3.8. of Appendix 1 to Annex XII to Commission Delegated Regulation (EU) No 44/2014, such as additional hardware or software protocol information, parameter identification, transfer functions, 'keep alive' requirements, or error conditions:	:	n.a.
7.6.4.2.	L3e-L7e (10)	Details of how to obtain and interpret all fault codes not in accordance with the standards prescribed in point 3.11. of Appendix 1 to Annex XII to Commission Delegated Regulation (EU) No 44/2014:	:	n.a.
7.6.4.3.	L3e-L7e (10)	A list of all available live data parameters including scaling and access information;	:	OBD Service $01, OBD Service $02, OBD Service $06 and OBD Service $09
7.6.4.4.	L3e-L7e (10)	A list of all available functional tests including device activation or control and the means to implement them;	:	Activation or control and the means to implement or simulate according to OBD Service $03
7.6.4.5.	L3e-L7e (10)	Details of how to obtain all component and status information, time stamps, pending DTC and freeze frames;	:	According to ISO 15031-5:2011
7.6.4.6.	L3e-L7e (10)	~~PCU/~~ECU identification and variant coding;	:	Make: UAES Type: MSE8.0 Software identification No.: CUB_PRO_T125 Calibration verification No.: ED110951
7.6.4.7.	L3e-L7e (10)	Details of how to reset service lights;	:	ISO 15031-5:2011 Chapter 7.4 Service 0x04 - Clear/reset emission-related diagnostic Information
7.6.4.8.	L3e-L7e (10)	Location of diagnostic connector and connector details;	:	Refer to drawing No. Cub pro 125-60
7.6.4.9.	L3e-L7e (10)	Engine code identification.	:	153FMI
7.6.5.		*Test and diagnosis of OBD monitored components*		
7.6.5.1.	L3e-L7e (10)	A description of tests to confirm its functionality, at the component or in the harness	:	OBD Service $03
7.7.		**Passenger handholds and footrests**		
7.7.1.		*Handholds*		
7.7.1.1.	L3e	Configuration	:	~~strap and/or~~ handle (4)
7.7.1.2.	L3e	Photographs and/or drawings showing the location and the construction	:	Refer to drawing No. Cub pro 125-63

7.7.2.		*Footrests*		
7.7.2.1.	L3e	Photographs and/or drawings showing the location and the construction	:	Refer to drawing No. Cub pro 125-51, Cub pro 125-51-1
7.8.		**Registration plate space**		
7.8.1.	L3e	Location of rear registration plate (indicate variants where necessary; drawings may be used as appropriate)	:	Refer to drawing No. Cub pro 125-47
7.8.1.1.	L3e	Height above road surface, upper edge	:	Refer to drawing No. Cub pro 125-47
7.8.1.2.	L3e	Height above road surface, lower edge	:	Refer to drawing No. Cub pro 125-47
7.8.1.3.	L3e	Distance of the centre line from the longitudinal median plane of the vehicle	:	0 mm
7.8.1.4.	L3e	Dimensions (length x width)	:	280 mm×210 mm
7.8.1.5.	L3e	Inclination of the plane to the vertical	:	26°
7.8.1.6.	L3e	Angle of visibility in the horizontal plane	:	Refer to drawing No. Cub pro 125-47
7.9.		**Stands**		
7.9.1.	L1e, L3e	Configuration	:	central and~~/or~~ side (4)
7.9.2.	L1e, L3e	Construction material used	:	steel
7.9.3.	L1e, L3e	Photographs and drawings showing the location of the stand(s) in relation to the structure of the vehicle	:	Refer to drawing No. Cub pro 125-50
7.9.4.	L1e, L3e	Description of the method to prevent contact of the stand with the ground when the vehicle is being propelled	:	Refer to drawing No. Cub pro 125-50

TYPE APPROVAL COMPONENTS OVERVIEW EXCLUDIND LIGHTING DEVICE

Item subject	**Make**	**Type**	**Type-approval number**
Audible warning devices	ZHONG YE	DL126J-12V	E9*28R00/05*6693*00
Rear view mirror	XINXIN	XX388-7	E13*81R00/02*9958*00

e13*168/2013*01827*00
Société Nationale de Certification et d'Homologation

Kamax Group Limited

Information document:168/2013-Cub pro 125-00
Application date:February 20,2023

e13*168/2013*01827*00
Société Nationale de Certification et d'Homologation

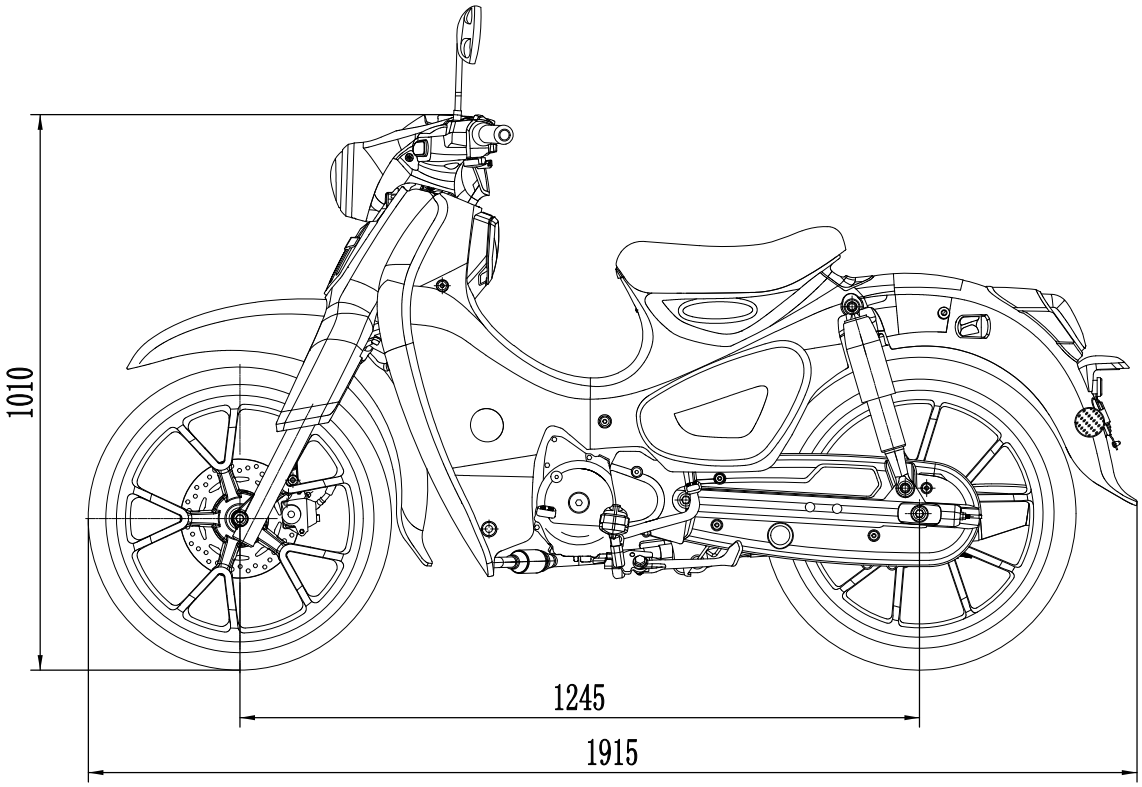

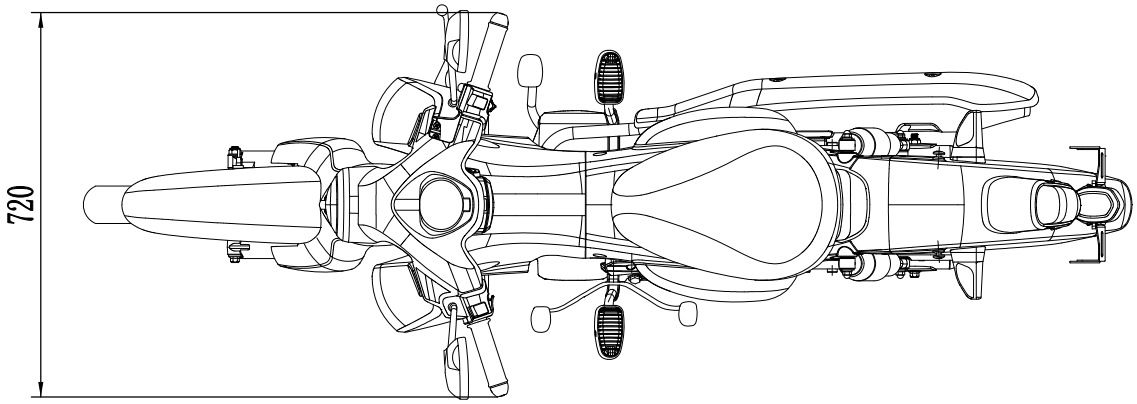

Vehicle Type	Cub pro 125
Complete Vehicle-Dimension(Version1)	
Drawing No	Cub pro 125-01-1

Kamax Group Limited

Information document:168/2013-Cub pro 125-00
Application date:February 20,2023

e13*168/2013*01827*00
Société Nationale de Certification et d'Homologation

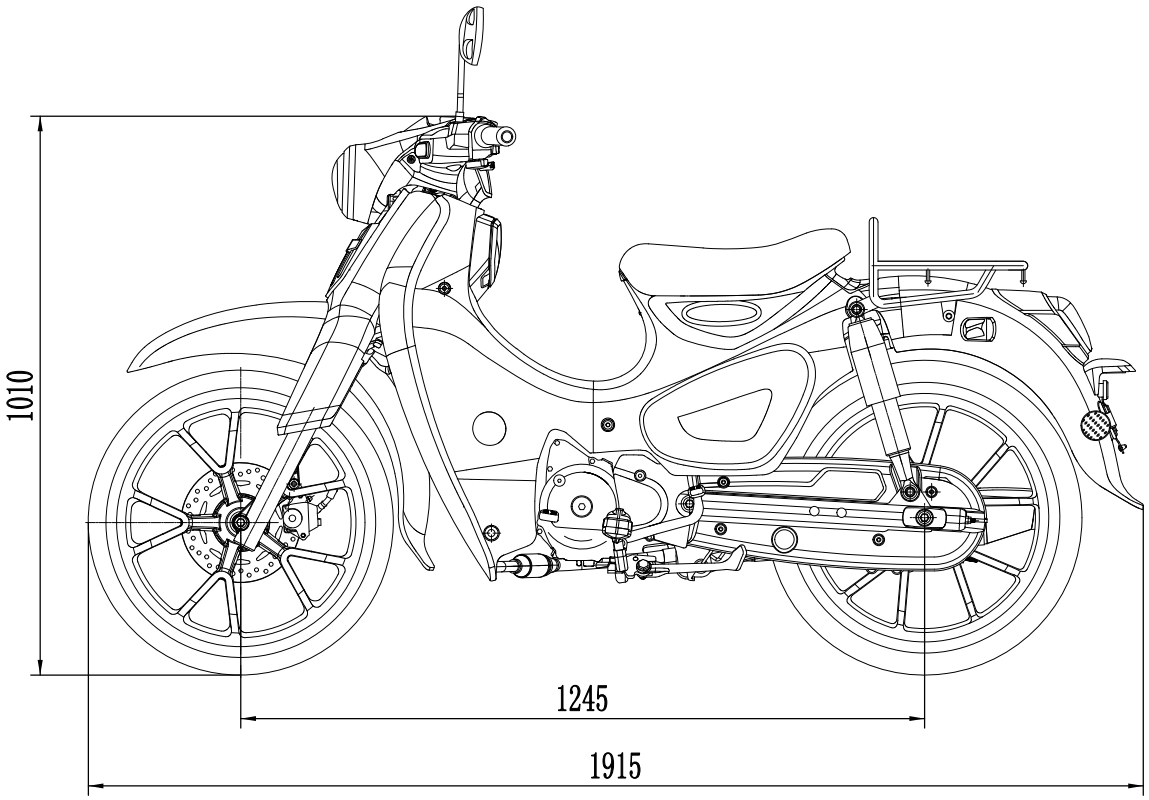

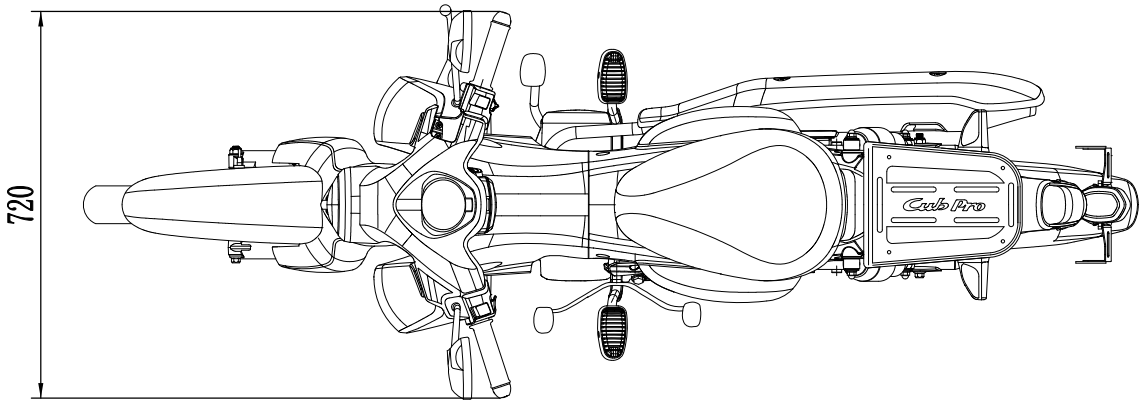

Vehicle Type	Cub pro 125
Complete Vehicle-Dimension(Version1-optional)	
Drawing No	Cub pro 125-01-2

Kamax Group Limited

Information document:168/2013-Cub pro 125-00
Application date:February 20,2023

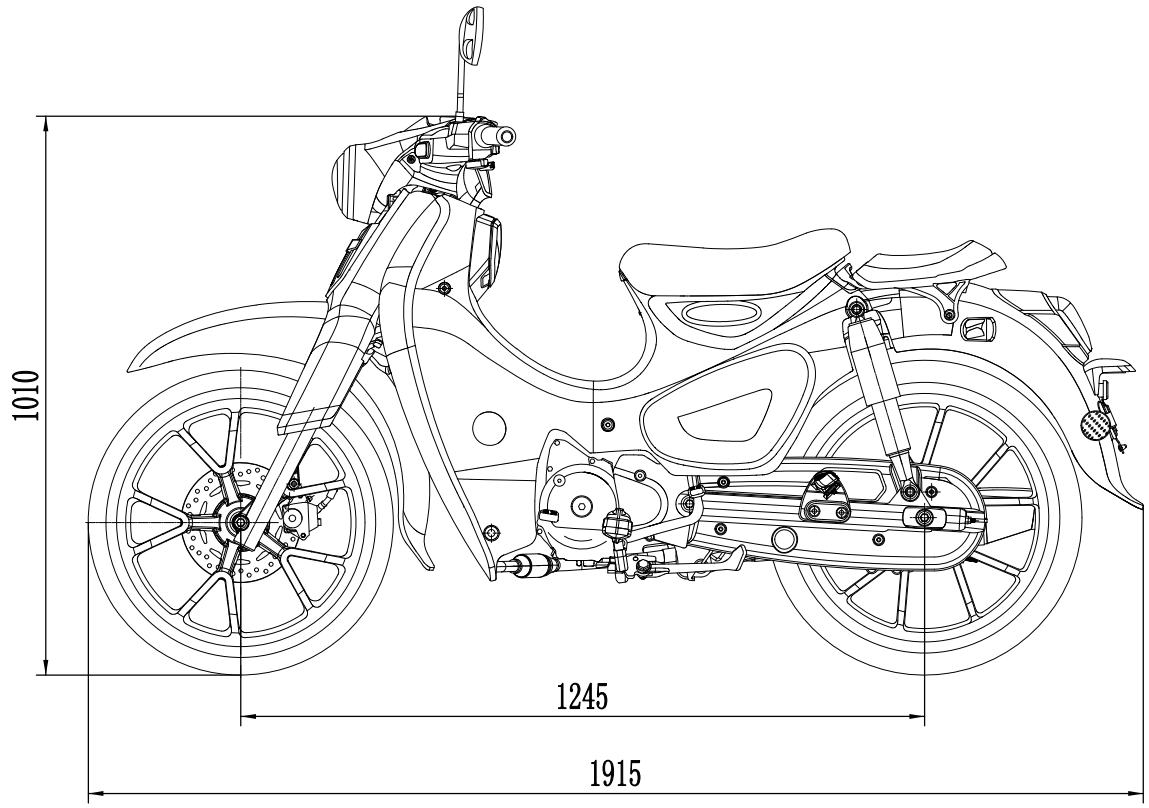

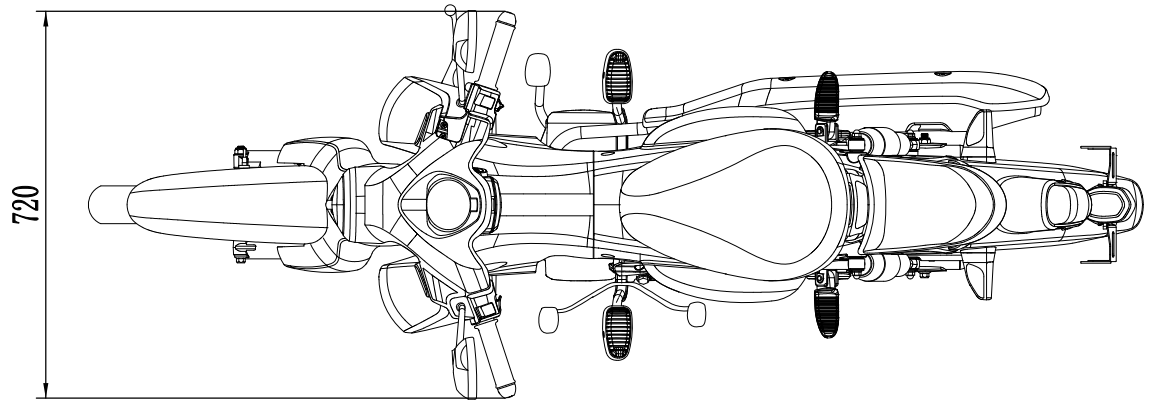

e13*168/2013*01827*00
Société Nationale de Certification et d'Homologation

Vehicle Type	Cub pro 125
Complete Vehicle-Dimension(Version2)	
Drawing No	Cub pro 125-01-3

Kamax Group Limited

Information document:168/2013-Cub pro 125-00
Application date:February 20,2023

e13*168/2013*01827*00
Société Nationale de Certification et d'Homologation

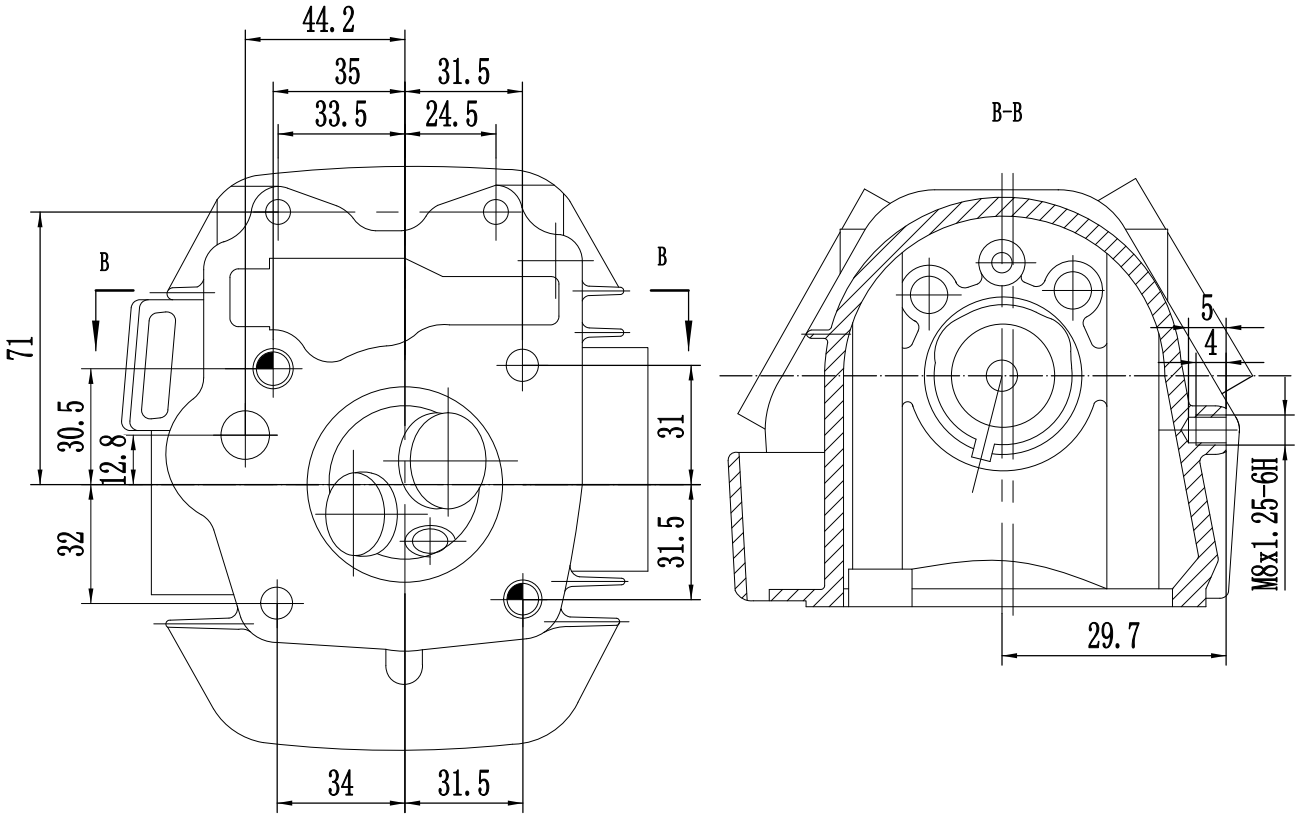

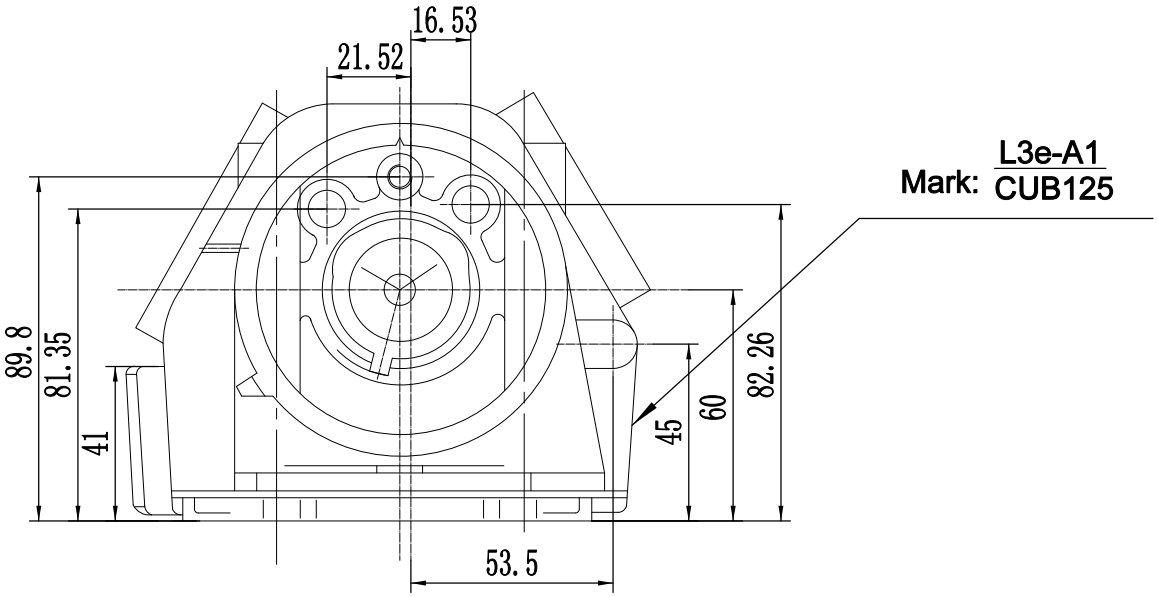

Vehicle Type	Cub pro 125
Cylinder Head	
Drawing No	Cub pro 125-02

Kamax Group Limited

Information document:168/2013-Cub pro 125-00
Application date:February 20,2023

e13*168/2013*01827*00
Société Nationale de Certification et d'Homologation

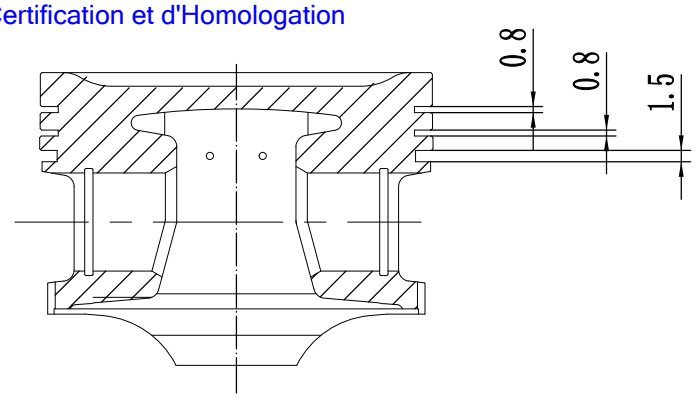

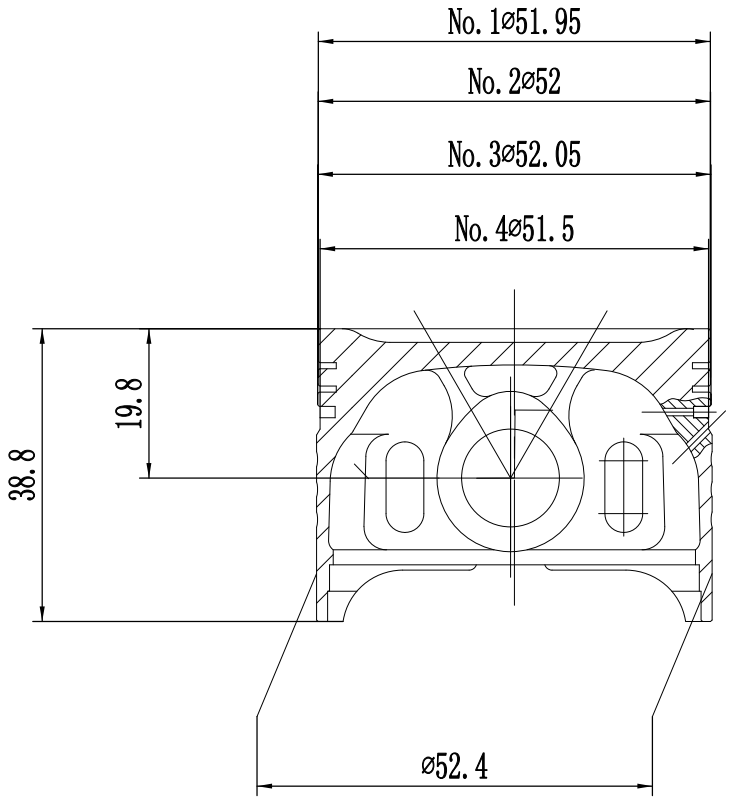

Vehicle Type	Cub pro 125
Piston	
Drawing No	Cub pro 125-03

e13*168/2013*01827*00
Société Nationale de Certification et d'Homologation

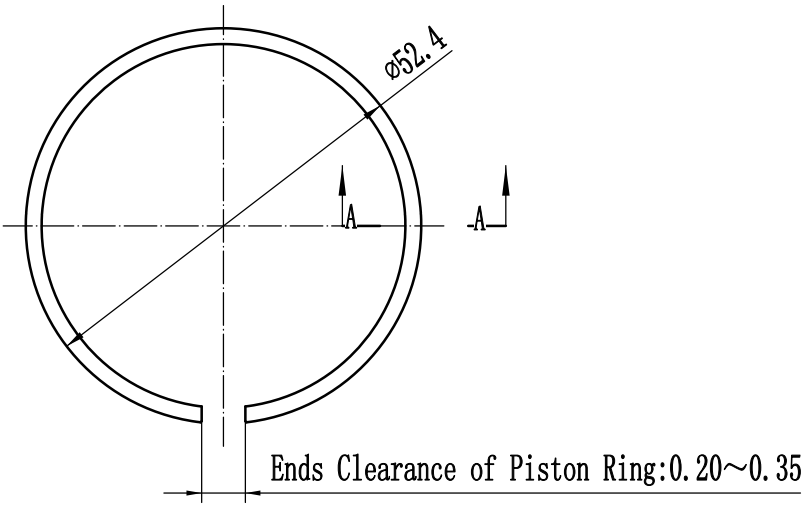

A-A
20:1

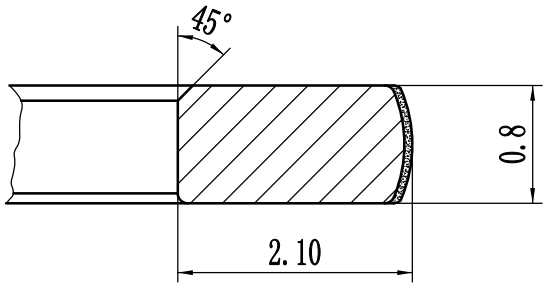

Vehicle Type	Cub pro 125
The First Piston Ring	
Drawing No	Cub pro 125-04

e13*168/2013*01827*00
Société Nationale de Certification et d'Homologation

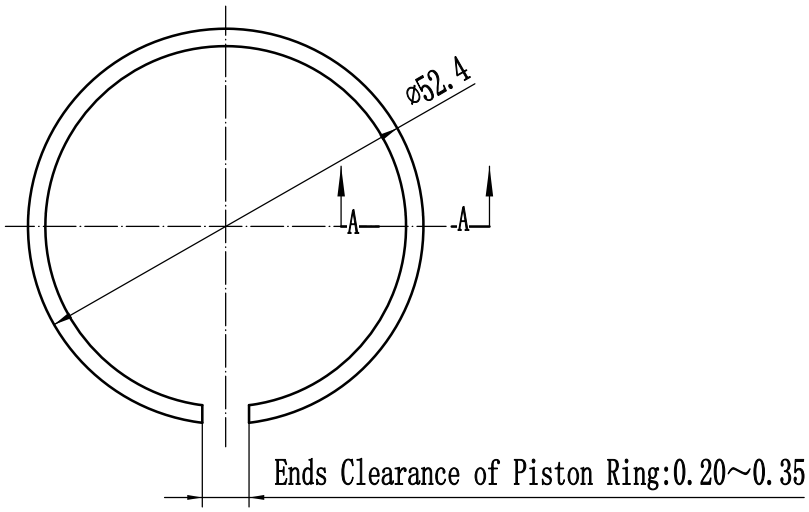

A-A
20:1

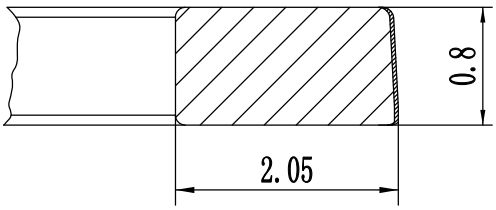

Vehicle Type	Cub pro 125
The Second Piston Ring	
Drawing No	Cub pro 125-05

e13*168/2013*01827*00
Société Nationale de Certification et d'Homologation

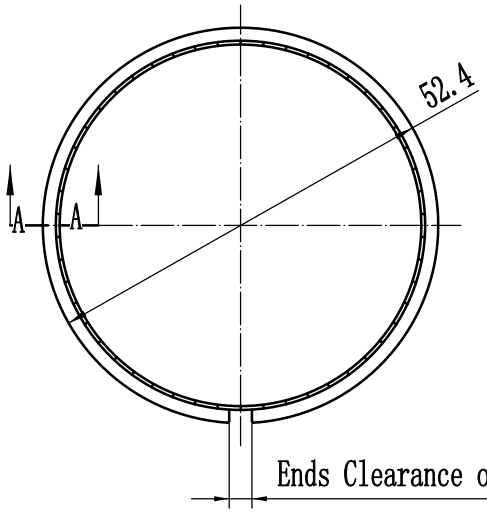

Ends Clearance of Piston Ring:0.20～0.60

Free Streeth：1.0～3.0

A-A
10:1

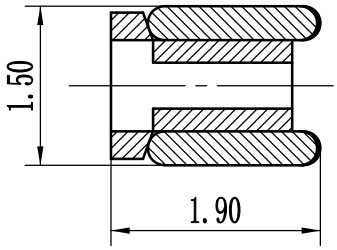

Vehicle Type	Cub pro 125
The Third Piston Ring	
Drawing No	Cub pro 125-06

Kamax Group Limited

Information document:168/2013-Cub pro 125-00
Application date:February 20,2023

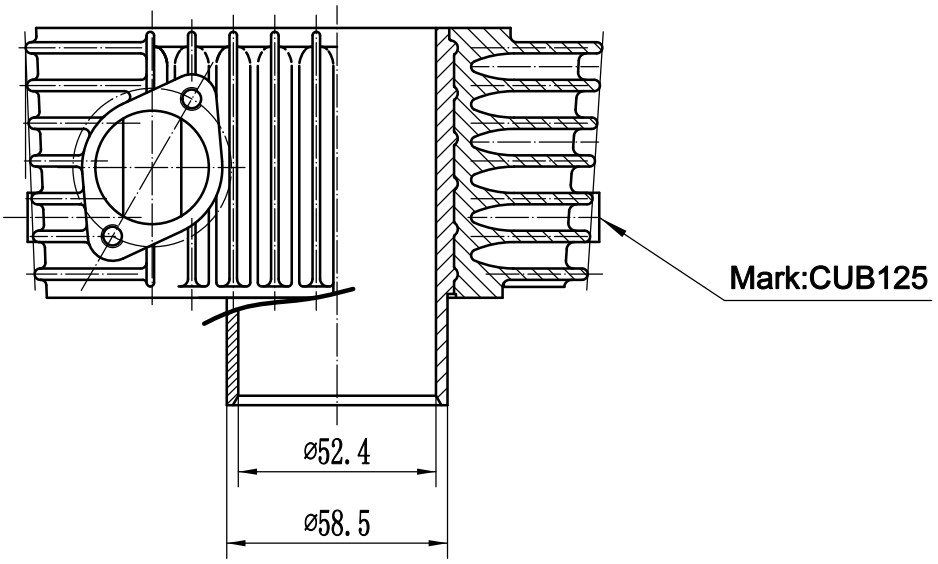

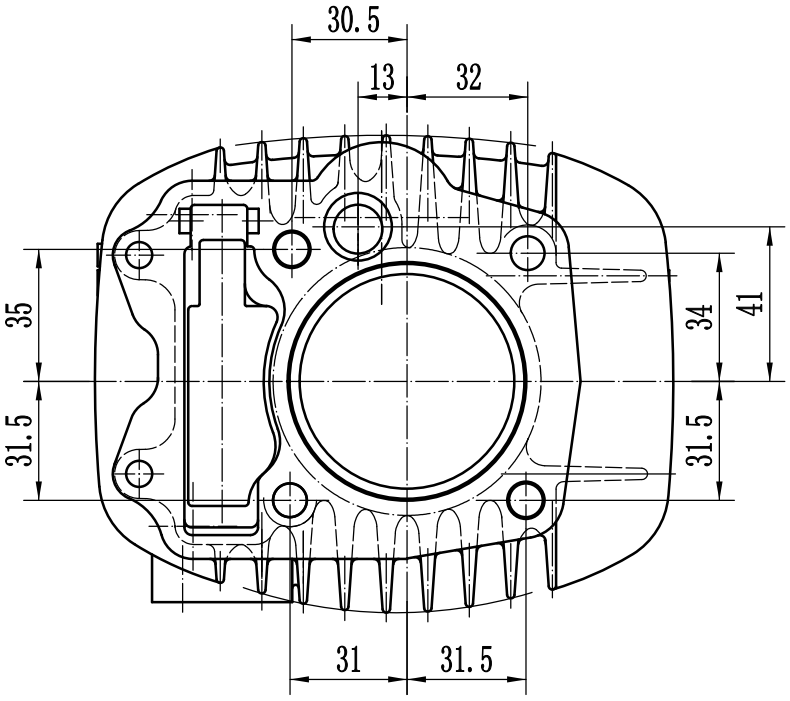

e13*168/2013*01827*00
Société Nationale de Certification et d'Homologation

Vehicle Type	Cub pro 125
Cylinder	
Drawing No	Cub pro 125-07

Kamax Group Limited

Information document:168/2013-Cub pro 125-00
Application date:February 20,2023

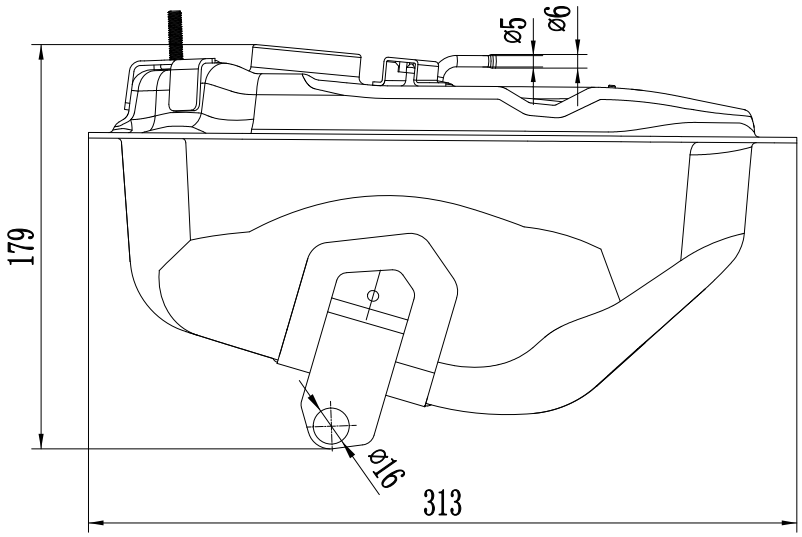

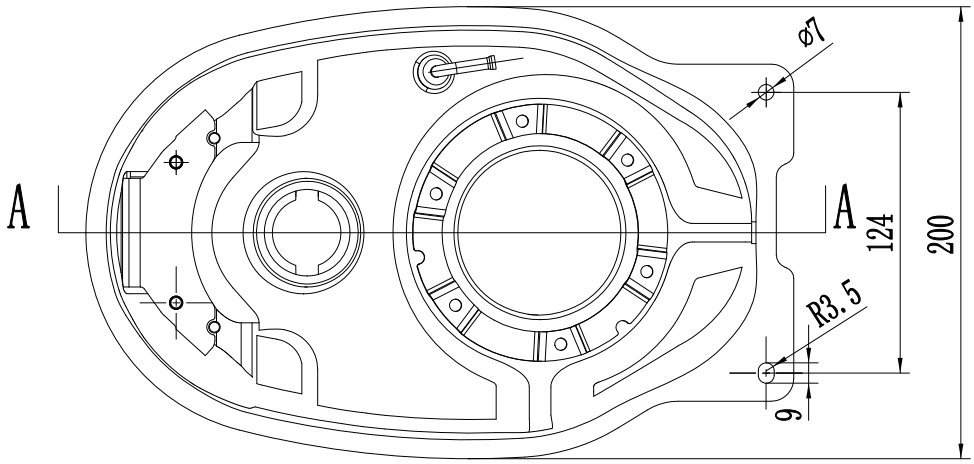

A-A
1:1

e13*168/2013*01827*00
Société Nationale de Certification et d'Homologation

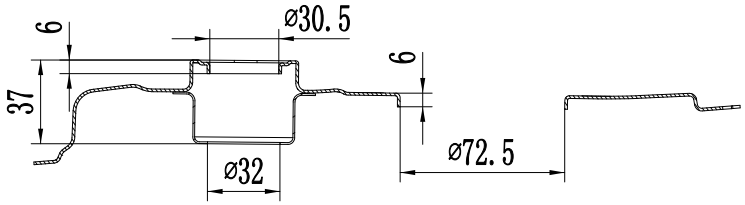

Capacity: 3.7L
Material:STEEL

Vehicle Type	Cub pro 125
Fule Tank	
Drawing No	Cub pro 125-08

e13*168/2013*01827*00

Société Nationale de Certification et d'Homologation

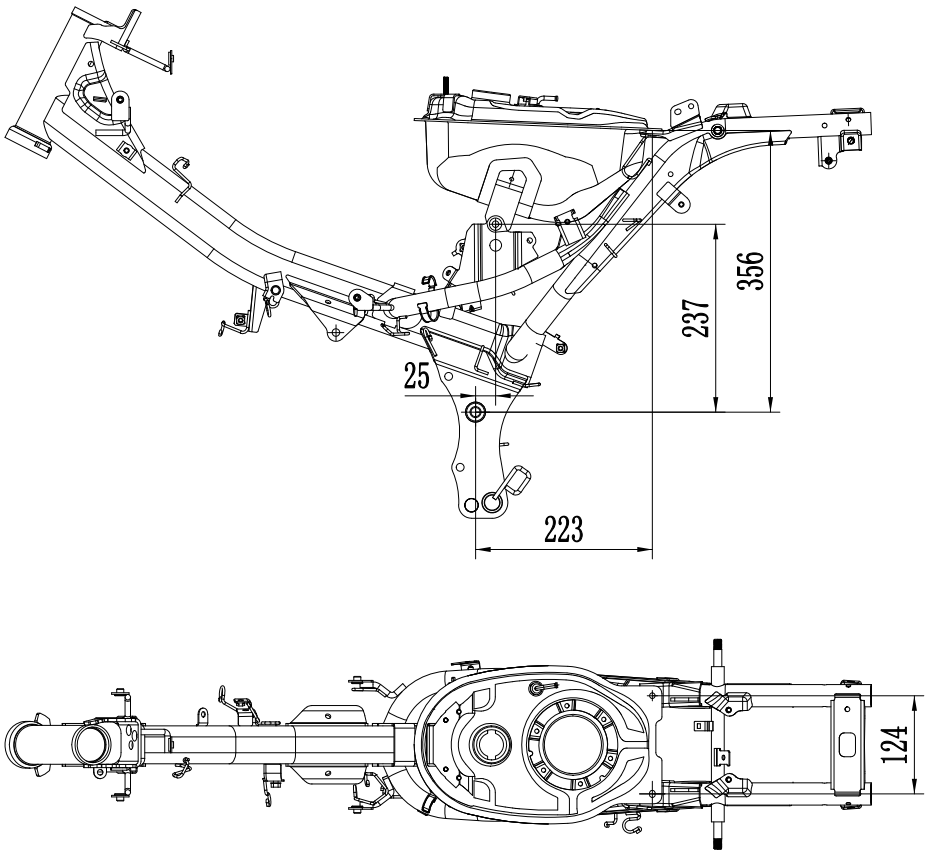

Vehicle Type	Cub pro 125
Fule Tank Installation	
Drawing No	Cub pro 125-09

Kamax Group Limited

Information document:168/2013-Cub pro 125-00
Application date:February 20,2023

e13*168/2013*01827*00
Société Nationale de Certification et d'Homologation

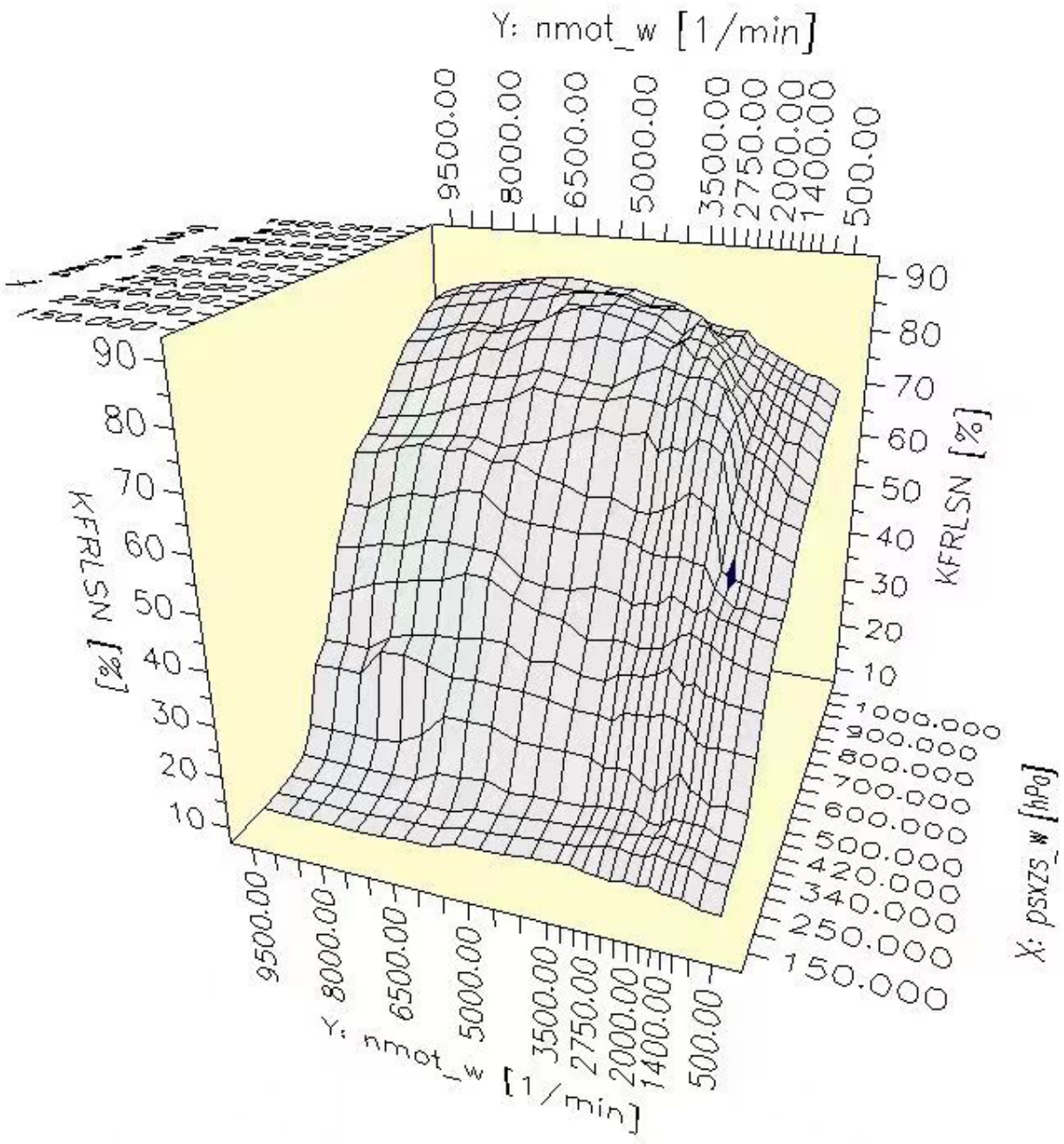

Vehicle Type	Cub pro 125
Ignition Advance Curve	
Drawing No	Cub pro 125-10

e13*168/2013*01827*00
Société Nationale de Certification et d'Homologation

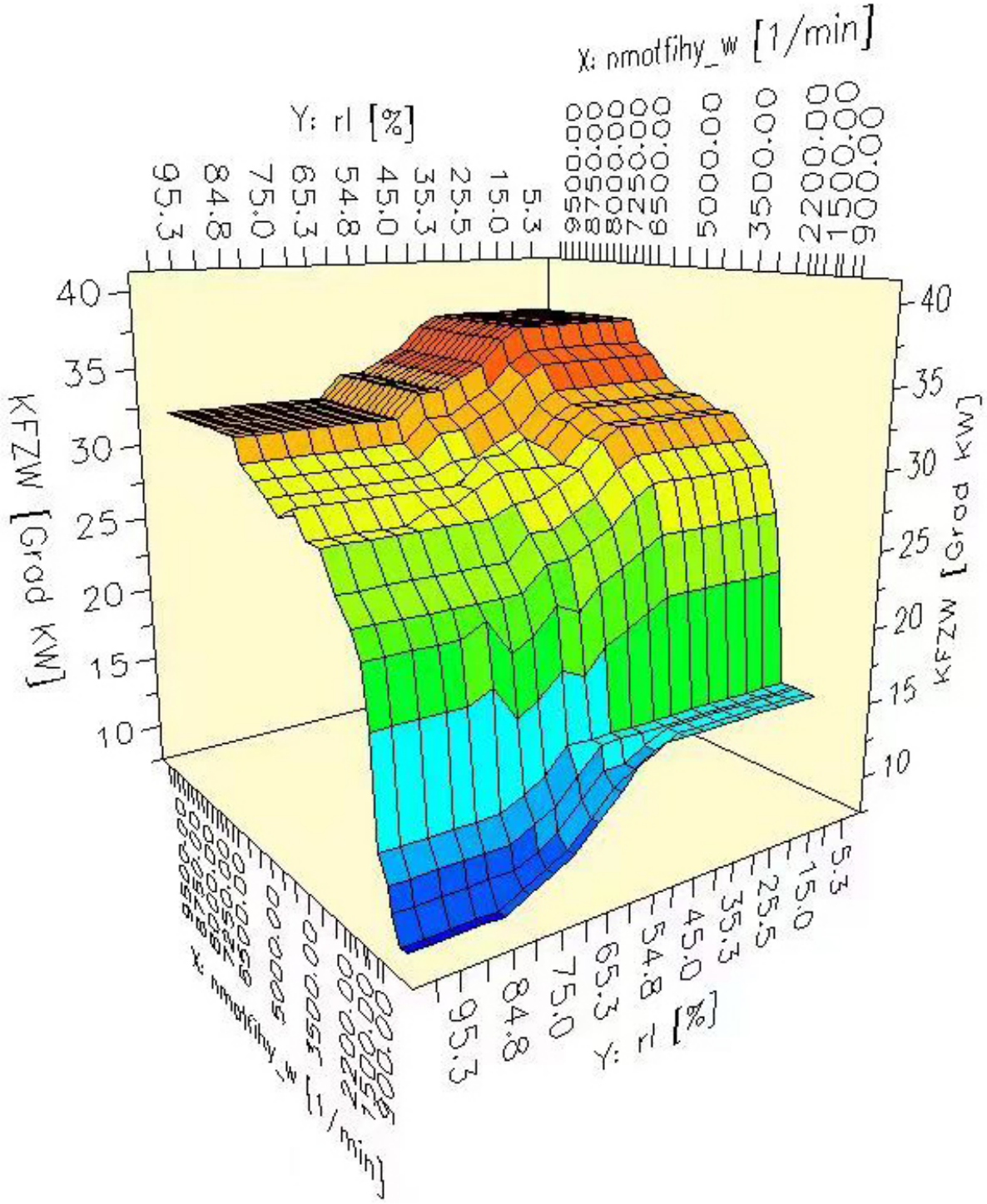

Vehicle Type	Cub pro 125
Injection advance curve	
Drawing No	Cub pro 125-11

e13*168/2013*01827*00
Société Nationale de Certification et d'Homologation

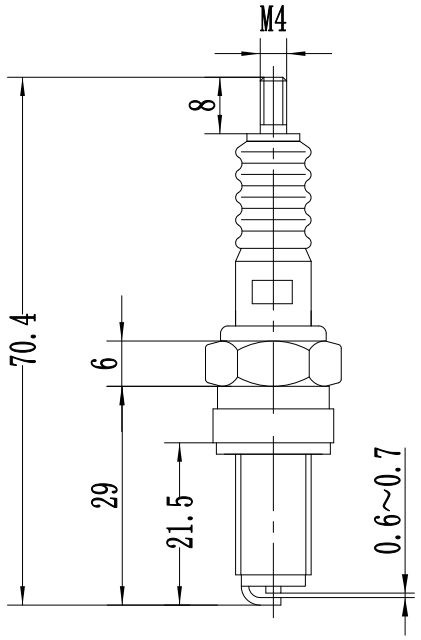

Mark:NGK
Type:CPR6EA

Vehicle Type	Cub pro 125
Anti Radiation-Spark Plug	
Drawing No	Cub pro 125-12

e13*168/2013*01827*00
Société Nationale de Certification et d'Homologation

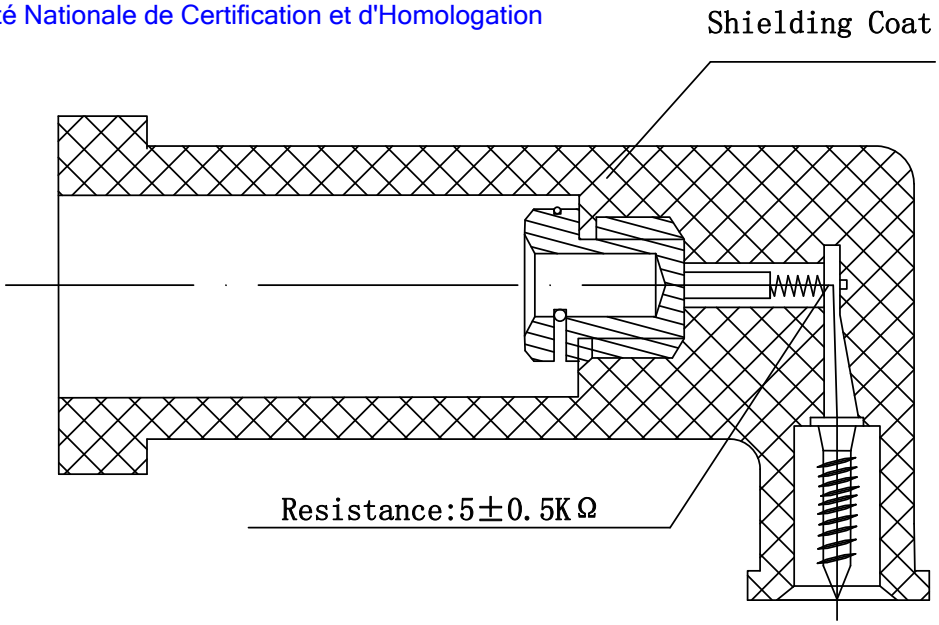

Vehicle Type	Cub pro 125
Anti Radiation-High Voltage Cap	
Drawing No	Cub pro 125-13

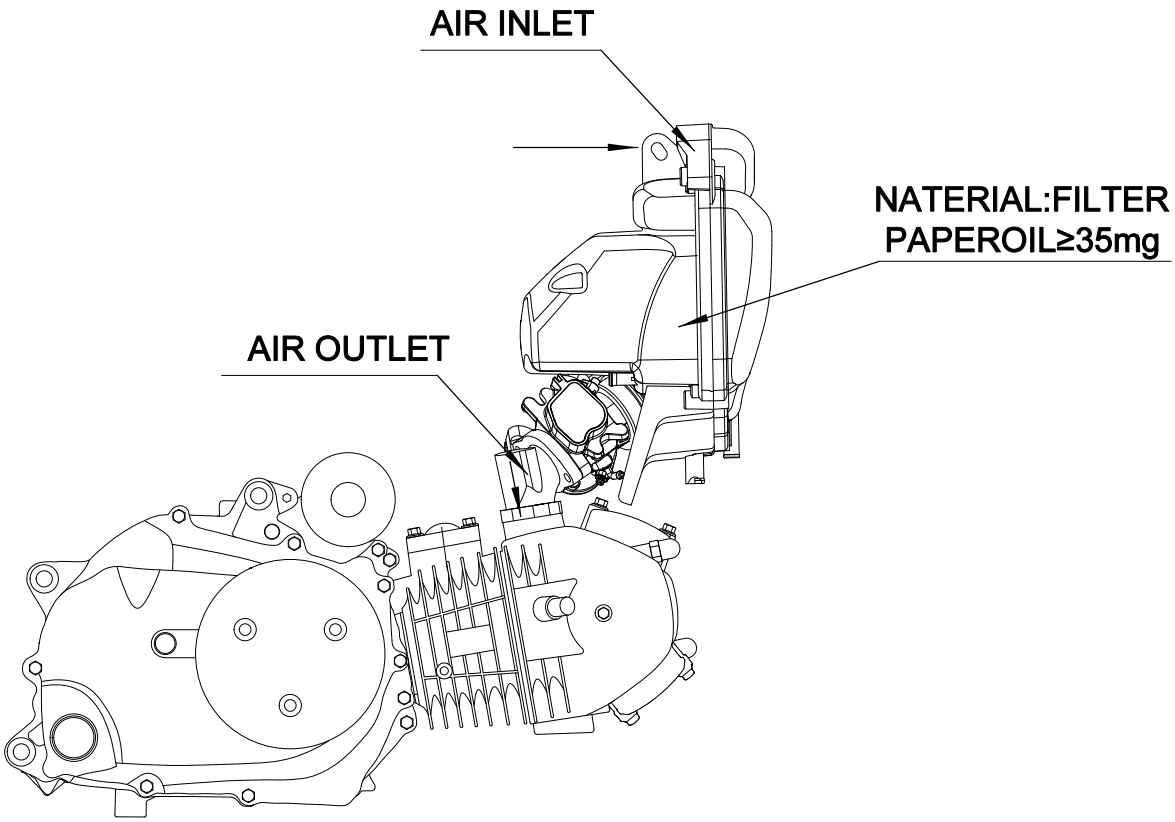

e13*168/2013*01827*00
Société Nationale de Certification et d'Homologation

Vehicle Type	Cub pro 125
Induction System	
Drawing No	Cub pro 125-14

e13*168/2013*01827*00
Société Nationale de Certification et d'Homologation

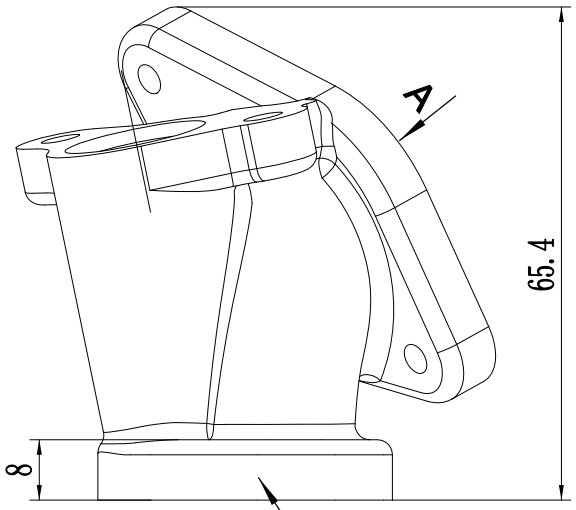

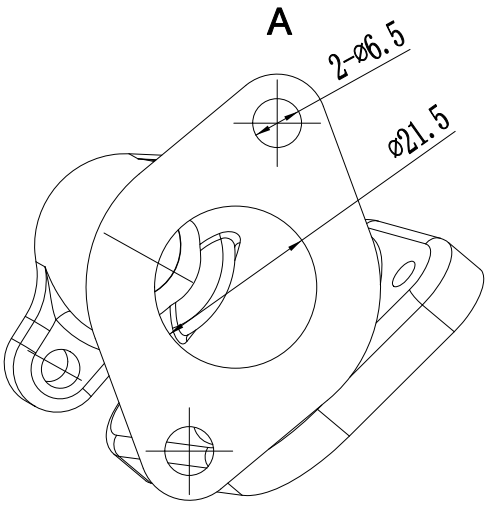

Mark: L3e / CUB125

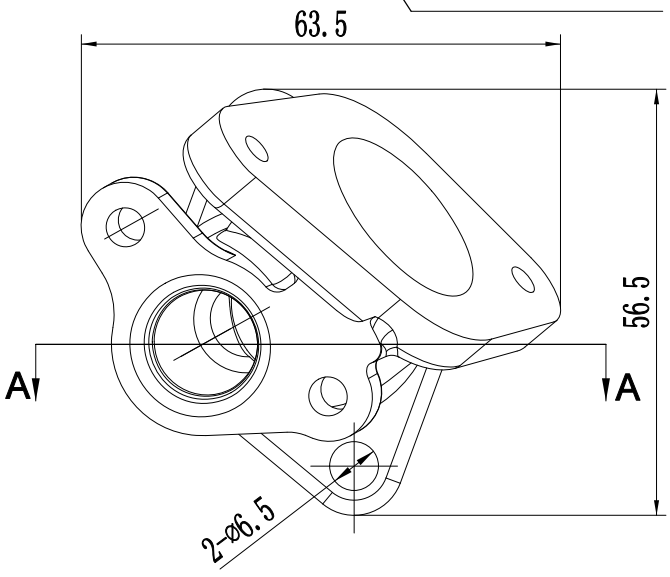

Section A-A

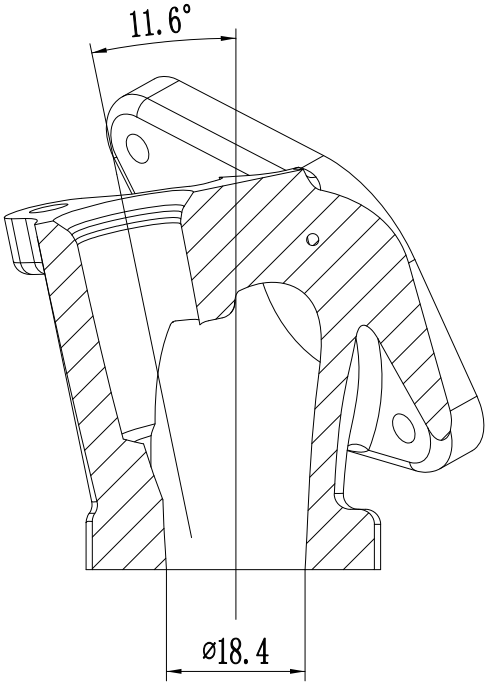

Vehicle Type	Cub pro 125
Induction Manifold	
Drawing No	Cub pro 125-15

Kamax Group Limited

Information document:168/2013-Cub pro 125-00
Application date:February 20,2023

e13*168/2013*01827*00
Société Nationale de Certification et d'Homologation

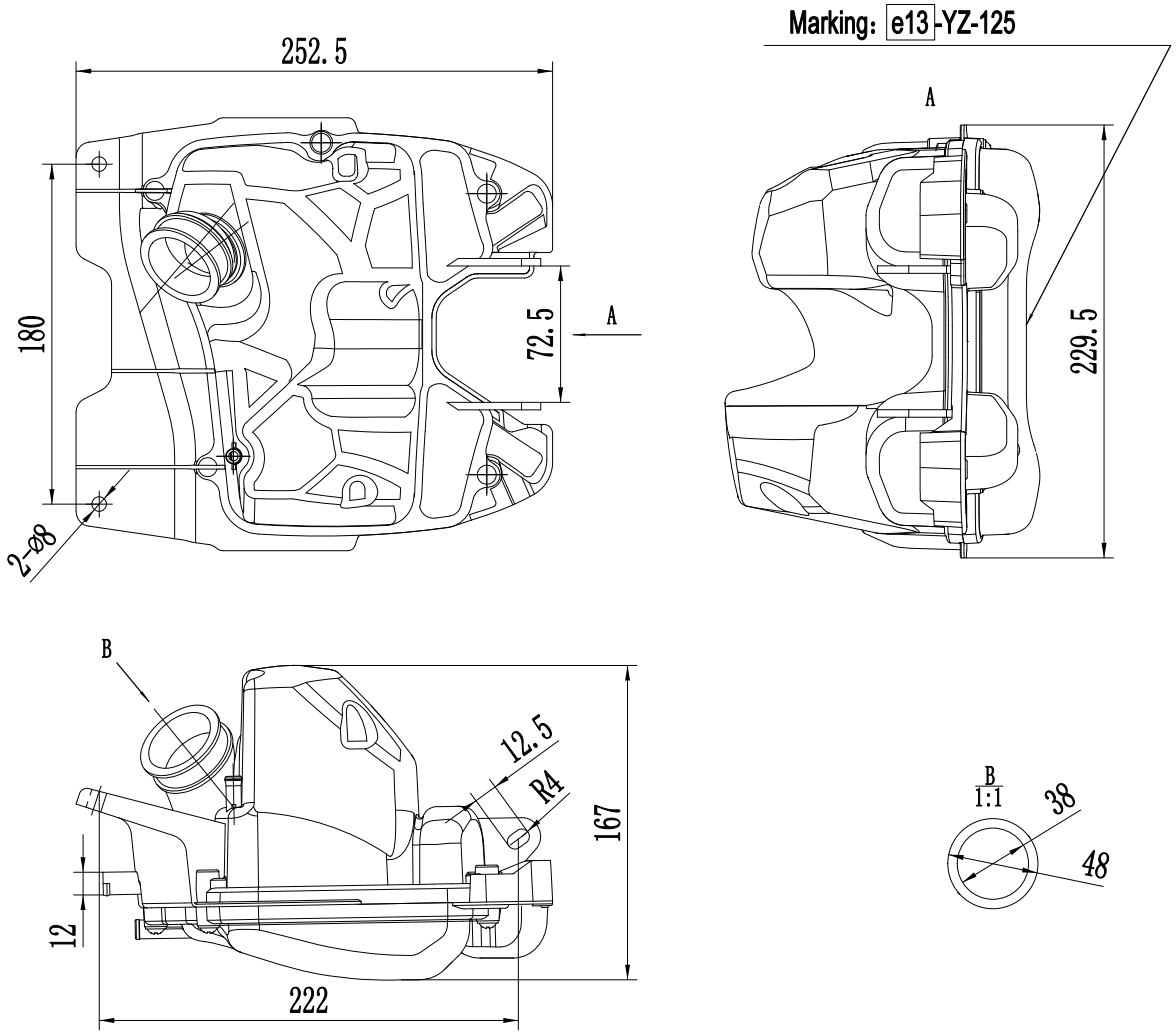

Make:YZ
Type:125

Vehicle Type	Cub pro 125
Air Filter	
Drawing No	Cub pro 125-16

e13*168/2013*01827*00
Société Nationale de Certification et d'Homologation

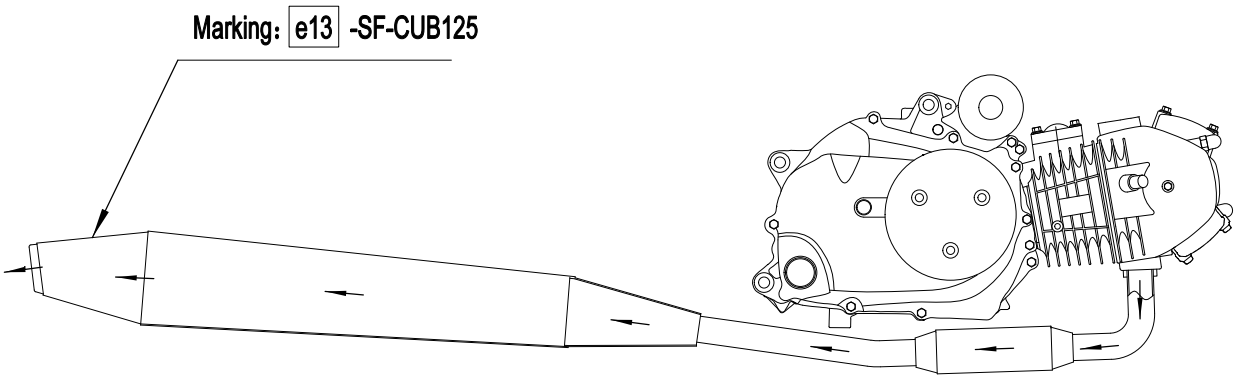

Make:SF
Type:CUB125

Vehicle Type	Cub pro 125
Complete Exhaust System	
Drawing No	Cub pro 125-17

e13*168/2013*01827*00
Société Nationale de Certification et d'Homologation

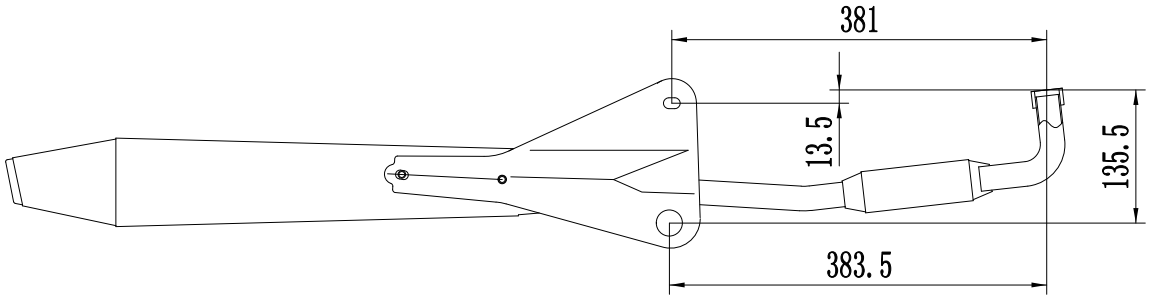

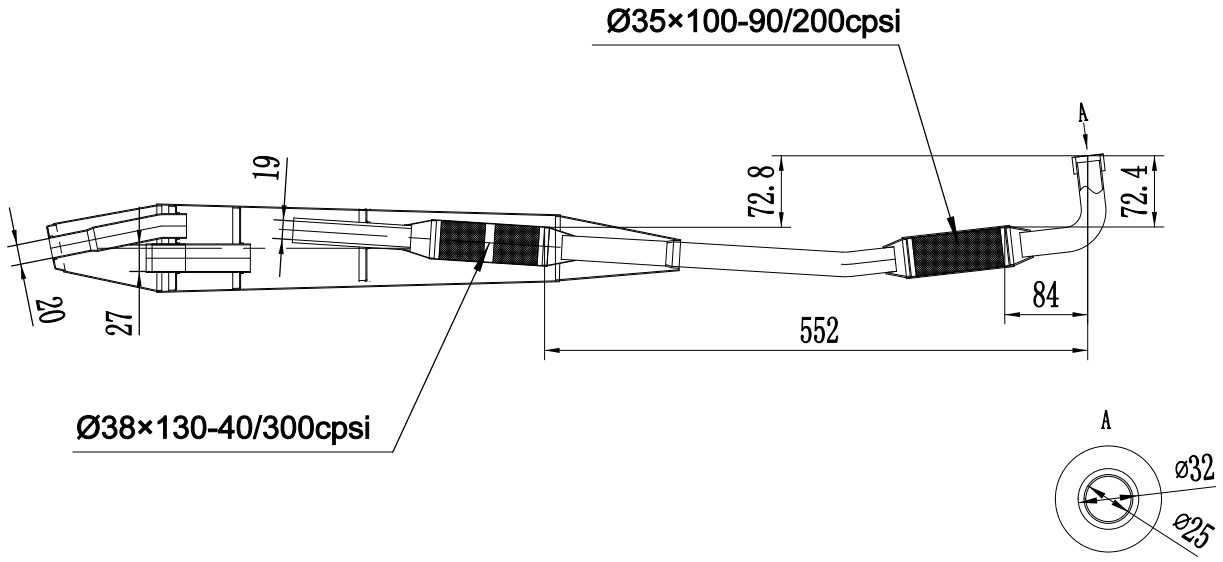

Vehicle Type	Cub pro 125
Exhaust Pipe Work	
Drawing No	Cub pro 125-18

Kamax Group Limited

Information document:168/2013-Cub pro 125-00
Application date:February 20,2023

Installation position	forepart、midpiece
Dimensions	Ø35×100 / Ø38×130
Total charge of precious metals	90g/ft^3 / 40g/ft^3
Relative concentration	Pt:Pd:Rh=10:10:1 Pt:Pd:Rh=5:5:1
Cell density	200cpsi / 300cpsi

marking:BT 35 100 200

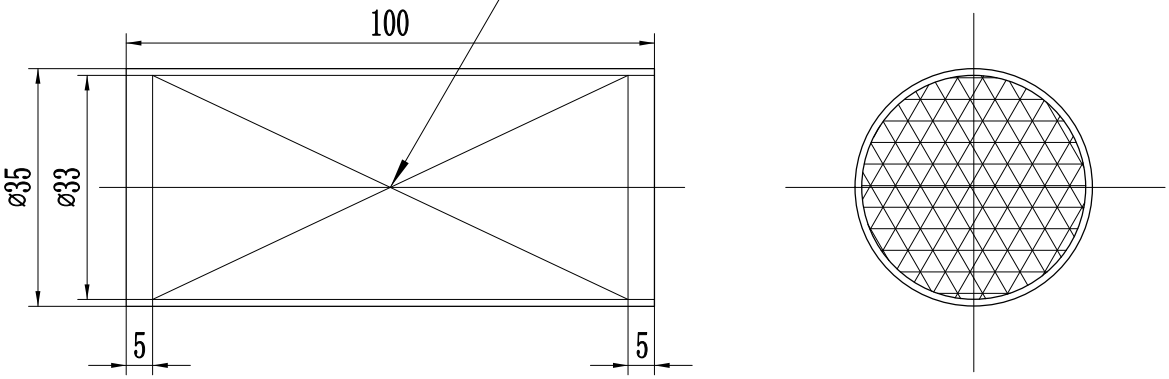

markng:BT 38 130 300

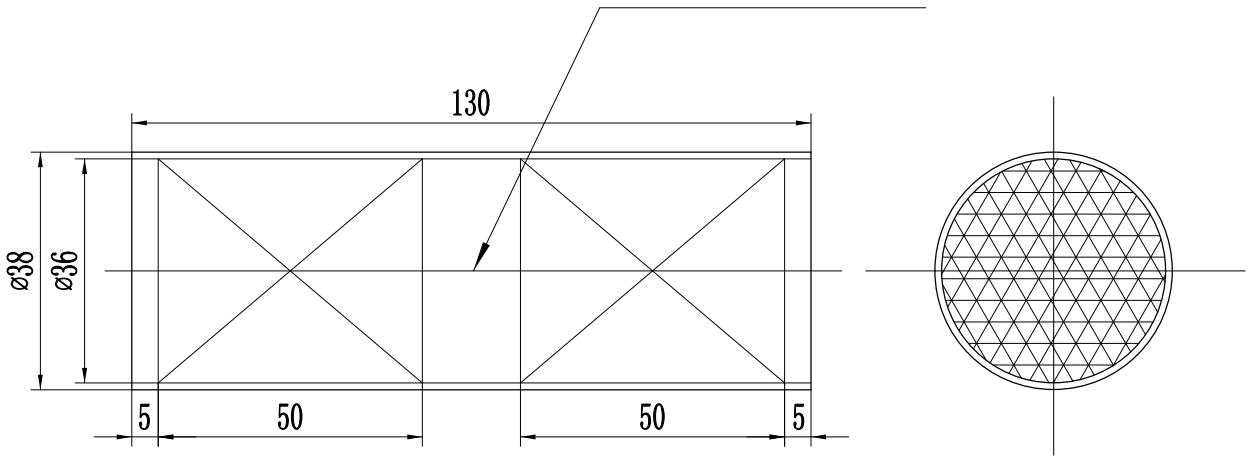

e13*168/2013*01827*00
Société Nationale de Certification et d'Homologation

Make:BT
Type:35 100 200 /38 130 300

Vehicle Type	Cub pro 125
Catalytic convert	
Drawing No	Cub pro 125-19

e13*168/2013*01827*00

Société Nationale de Certification et d'Homologation

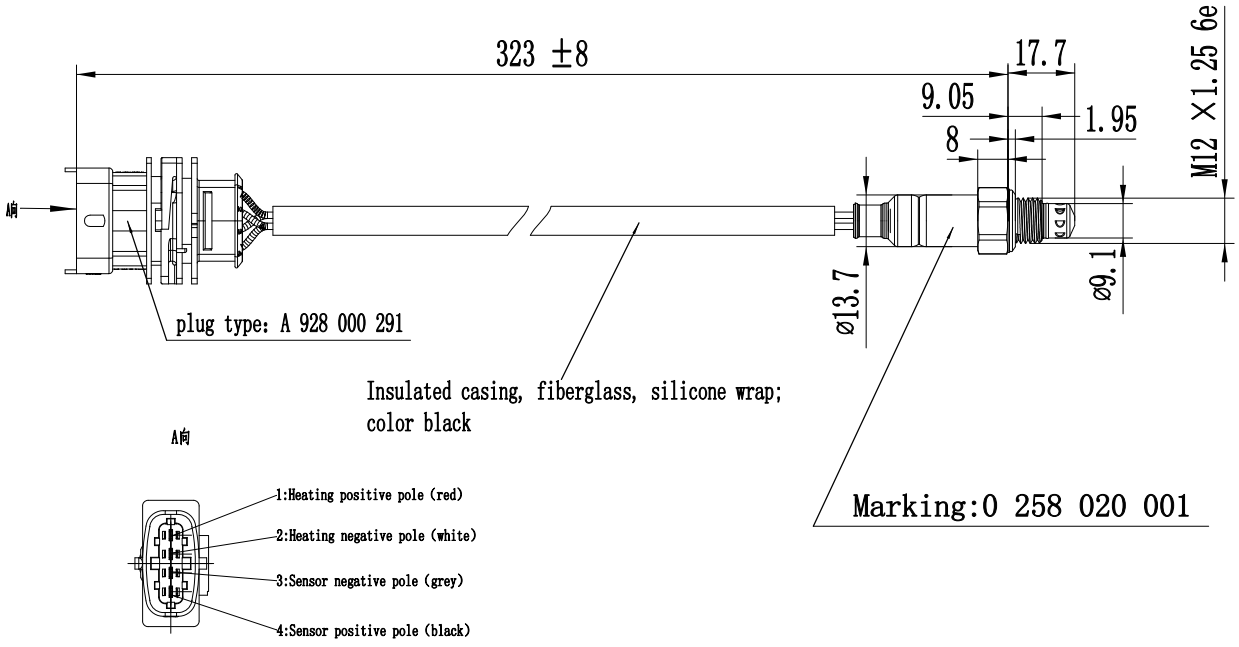

Type:0 258 020 001

Make:

Vehicle Type	Cub pro 125
Oxygen sensor	
Drawing No	Cub pro 125-20

e13*168/2013*01827*00
Société Nationale de Certification et d'Homologation

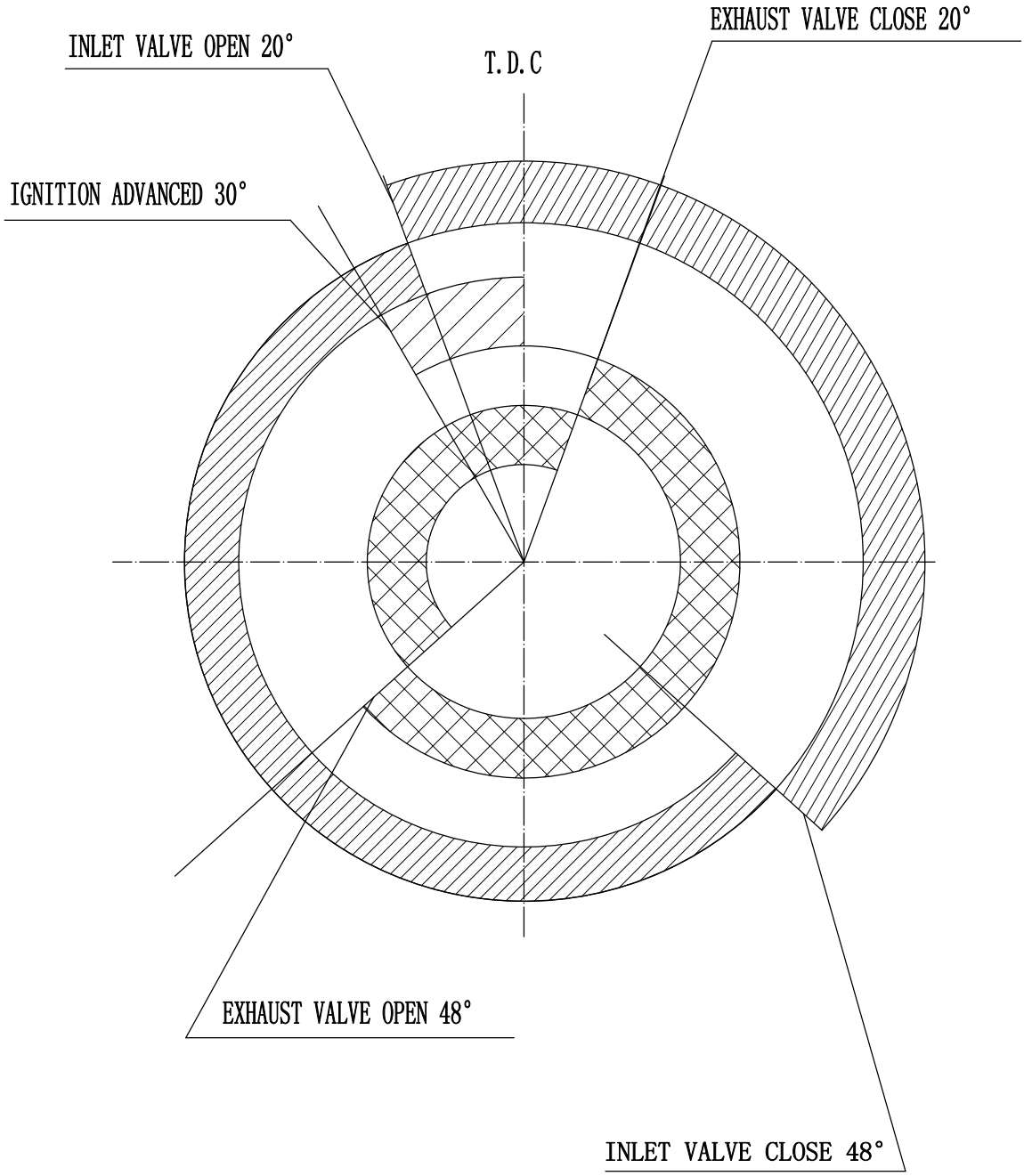

Vehicle Type	Cub pro 125
Engine Cycles	
Drawing No	Cub pro 125-21

e13*168/2013*01827*00
Société Nationale de Certification et d'Homologation

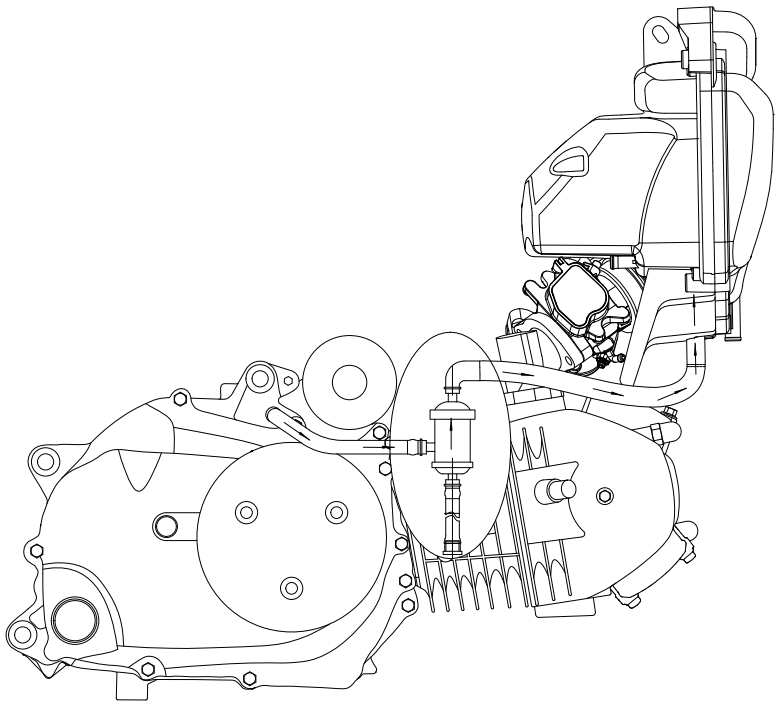

Vehicle Type	Cub pro 125
Crankcase-gas Recycling Device	
Drawing No	Cub pro 125-22

e13*168/2013*01827*00
Société Nationale de Certification et d'Homologation

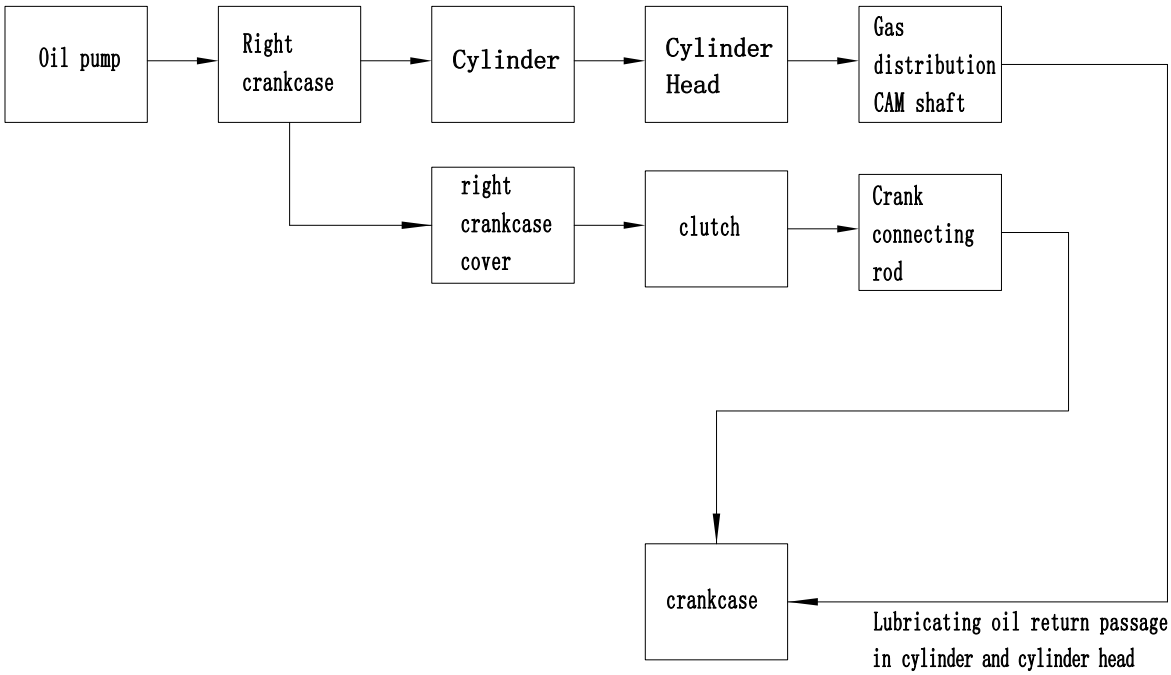

Vehicle Type	Cub pro 125
lubrication system	
Drawing No	Cub pro 125-23

e13*168/2013*01827*00
Société Nationale de Certification et d'Homologation

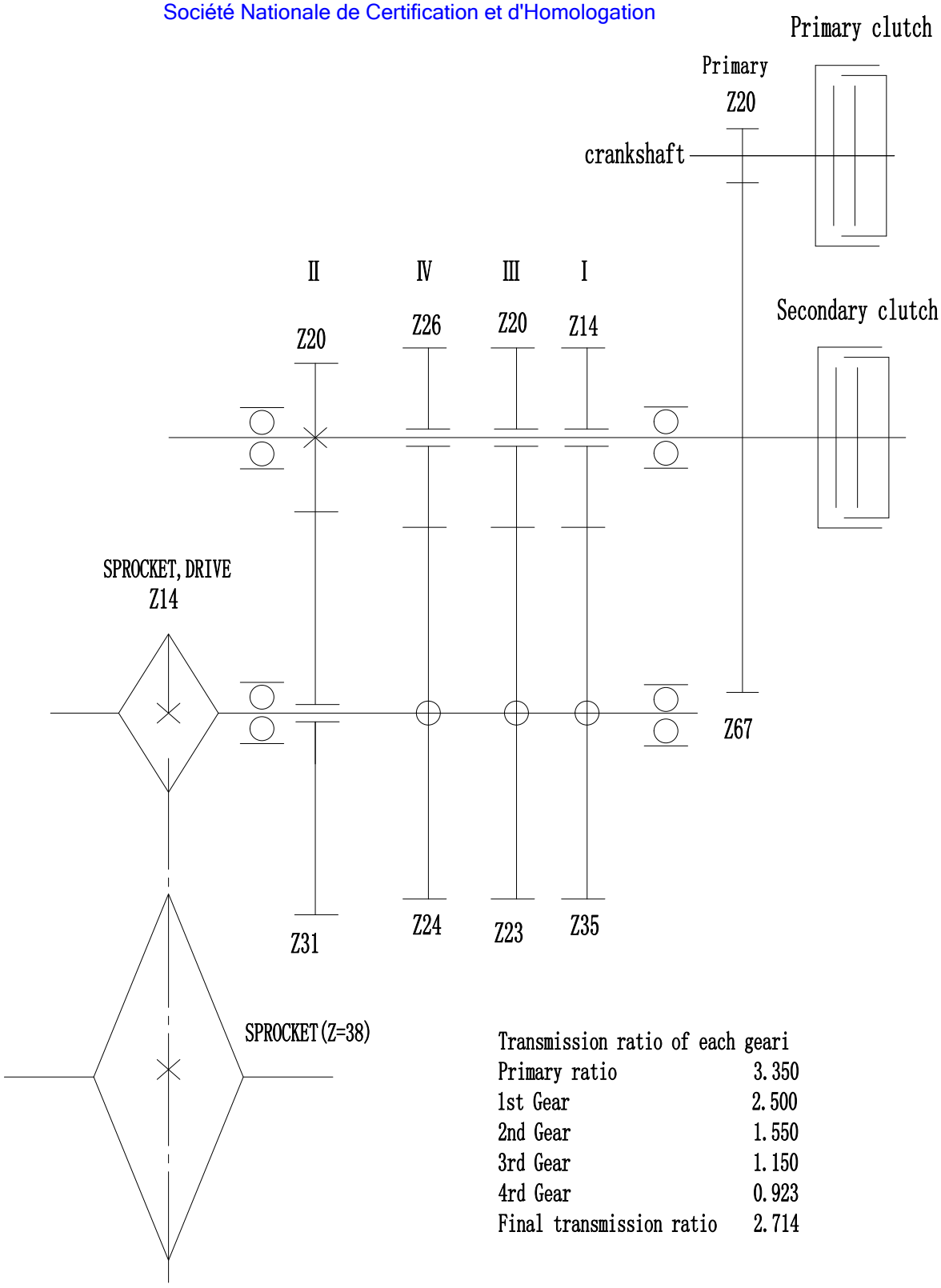

Transmission ratio of each geari

Primary ratio	3.350
1st Gear	2.500
2nd Gear	1.550
3rd Gear	1.150
4rd Gear	0.923
Final transmission ratio	2.714

Vehicle Type	Cub pro 125
Transmission Diagram	
Drawing No	Cub pro 125-24

Kamax Group Limited

Information document:168/2013-Cub pro 125-00
Application date:February 20,2023

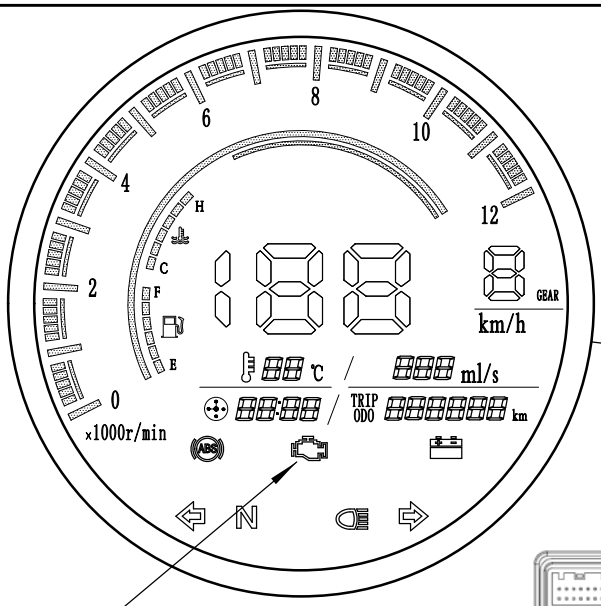

speedometer wiring harness

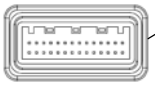

22011-28A-1

The malfunctionin dicator(MI)

Color:Amber

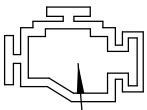

The drawing refer:ISO 2575-2010

ABS

e13*168/2013*01827*00
Société Nationale de Certification et d'Homologation

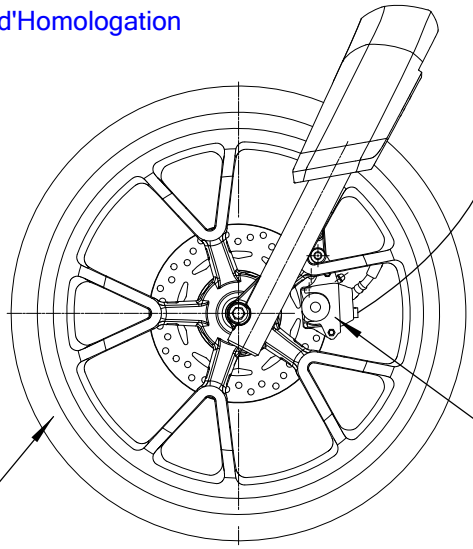

front wheel

front sensor

Technical constant of the speedometer:48.8Hz/10km

make:BOERXU
type:SCY22-25A

Vehicle Type	Cub pro 125
Speedometer	
Drawing No	Cub pro 125-25

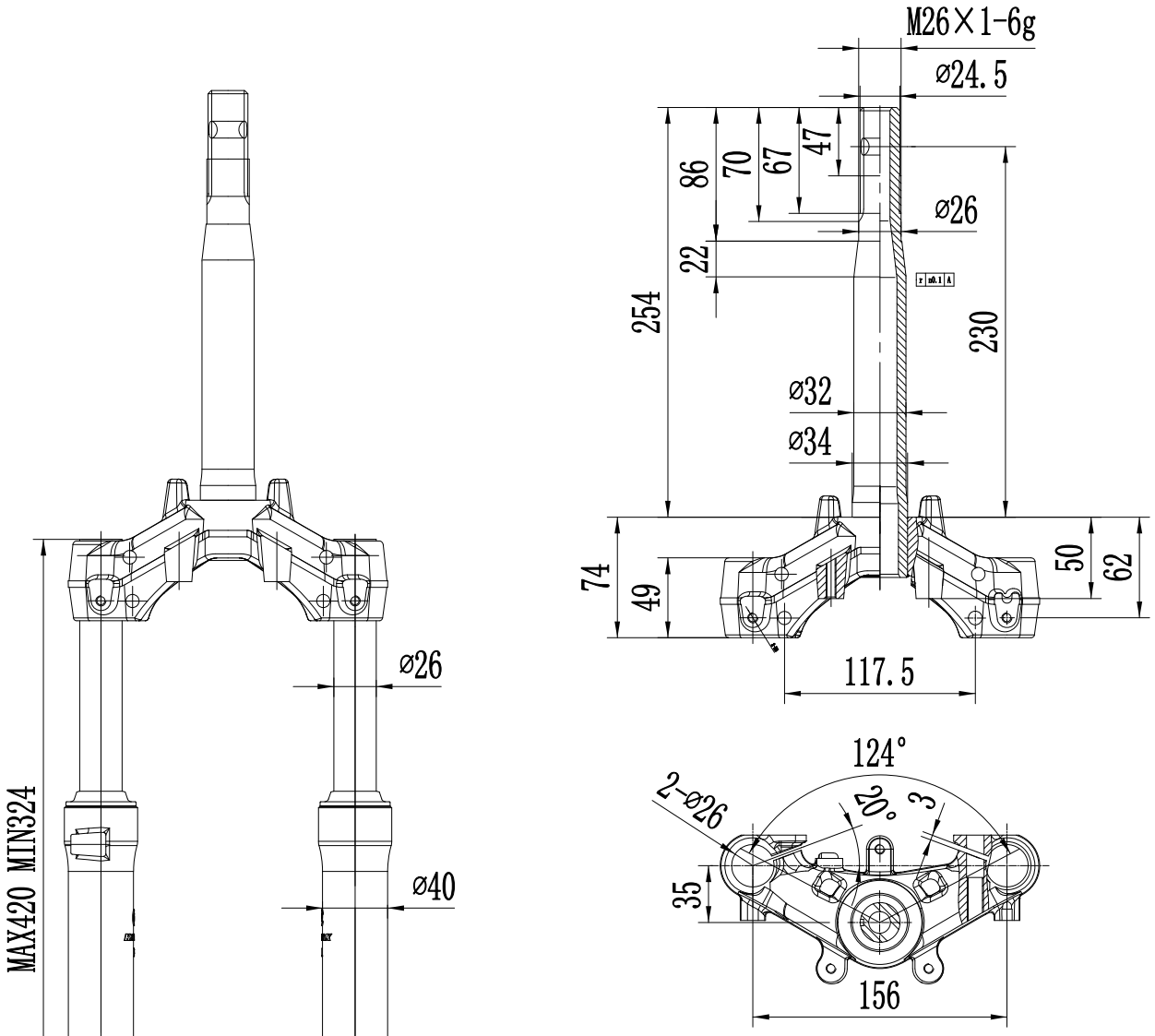

e13*168/2013*01827*00
Société Nationale de Certification et d'Homologation

Vehicle Type	Cub pro 125
Front Fork Assy	
Drawing No	Cub pro 125-26

e13*168/2013*01827*00
Société Nationale de Certification et d'Homologation

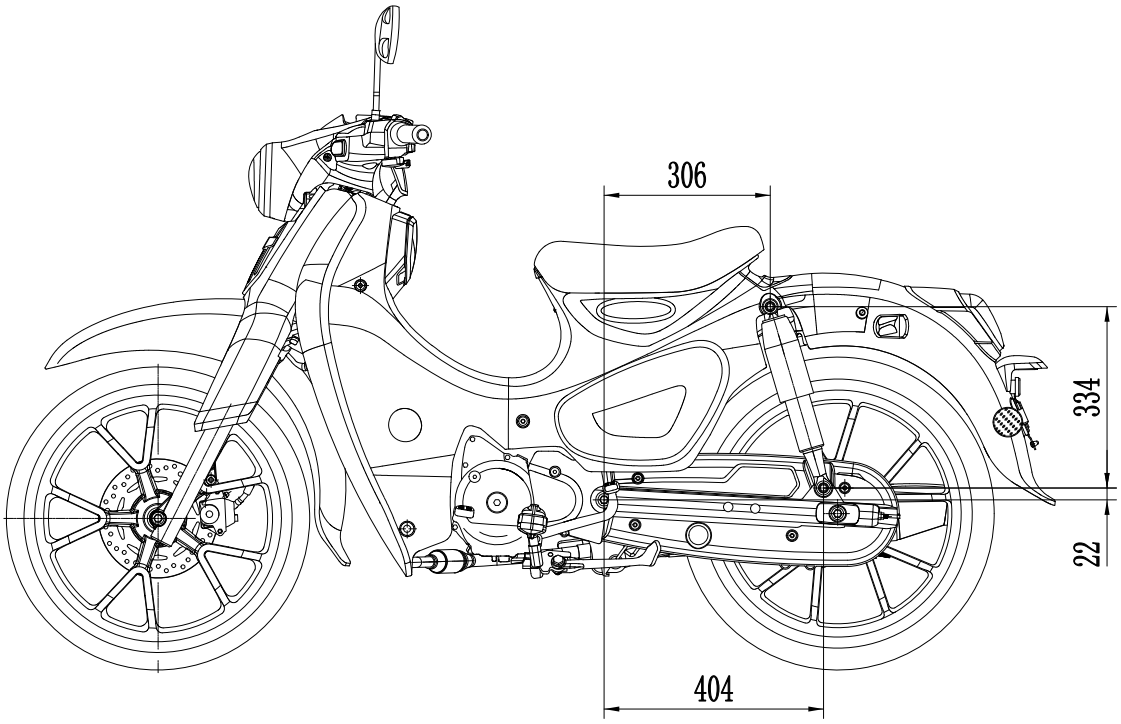

Vehicle Type	Cub pro 125
Rear Suspension	
Drawing No	Cub pro 125-27

Kamax Group Limited

Information document:168/2013-Cub pro 125-00
Application date:February 20,2023

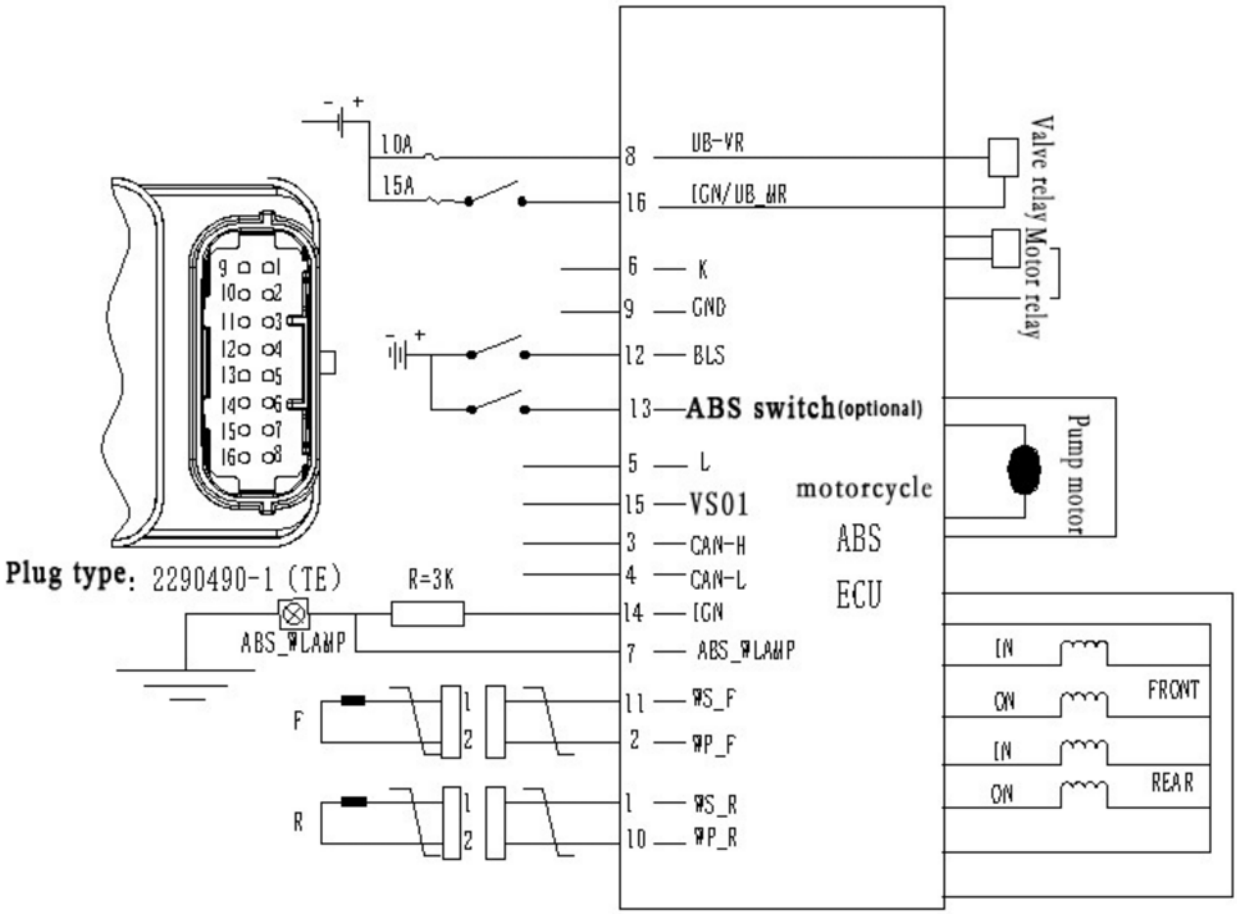

1	WS_R	Rear wheel speed signal	9	GND	GND
2	WP_F	Front wheel sensor signal	10	WP_R	Rear wheel sensor signal
3	CAN_H	CAN Hight	11	WS_F	Front wheel speed signal
4	CAN_L	CAN Low	12	BLS	Brake Light Switch
5	L_Line	L_Line	13	ABS_SW	ABS Switch
6	K_Line	K_Line	14	IGN	Ignition
7	ABS_WLAMP	ABS Warning Lamp	15	VSO1	Vehicle Speed Output
8	UB_VR	Solenoid Valves Supply	16	UB_VM	Motor Supply

e13*168/2013*01827*00
Société Nationale de Certification et d'Homologation

Make:HT
Type:HT F1
Approval NO.:E13-10R-0515396

Vehicle Type	Cub pro 125
Anti-lock braking system	
Drawing No	Cub pro 125-28

Kamax Group Limited

Information document:168/2013-Cub pro 125-00
Application date:February 20,2023

e13*168/2013*01827*00
Société Nationale de Certification et d'Homologation

A:74.5×40.8×7.2

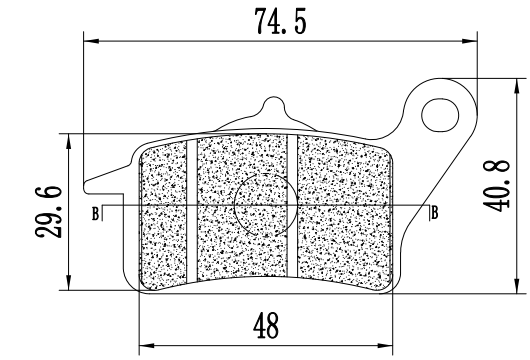

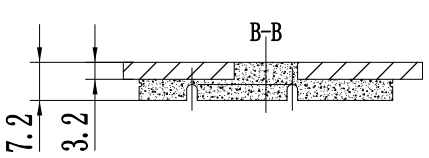

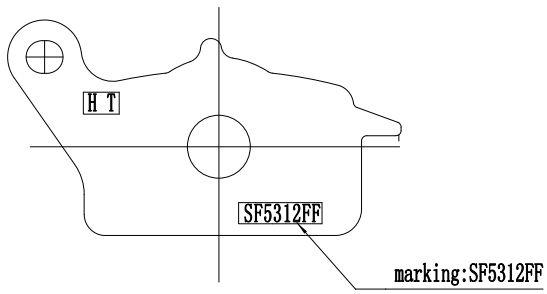

B:85.2×44.8×7.2

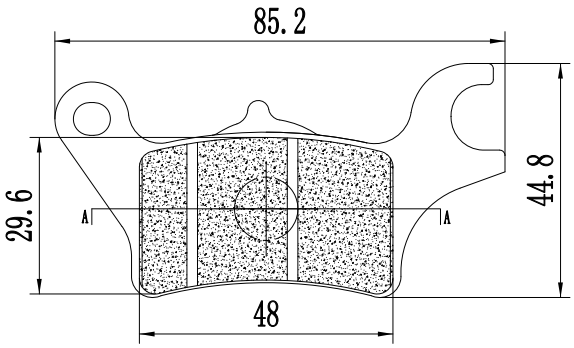

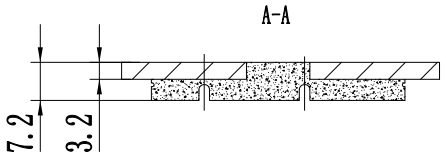

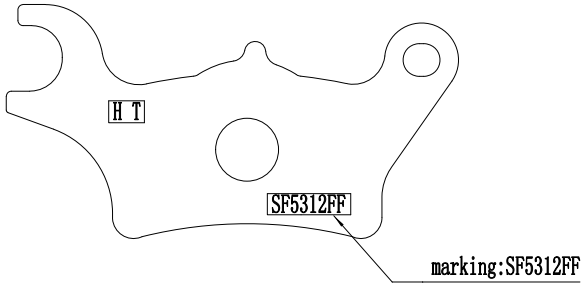

Make:HT
Type:SF5312FF

Vehicle Type	Cub pro 125
Front Brake Pads Assy	
Drawing No	Cub pro 125-29

Kamax Group Limited

Information document:168/2013-Cub pro 125-00
Application date:February 20,2023

e13*168/2013*01827*00
Société Nationale de Certification et d'Homologation

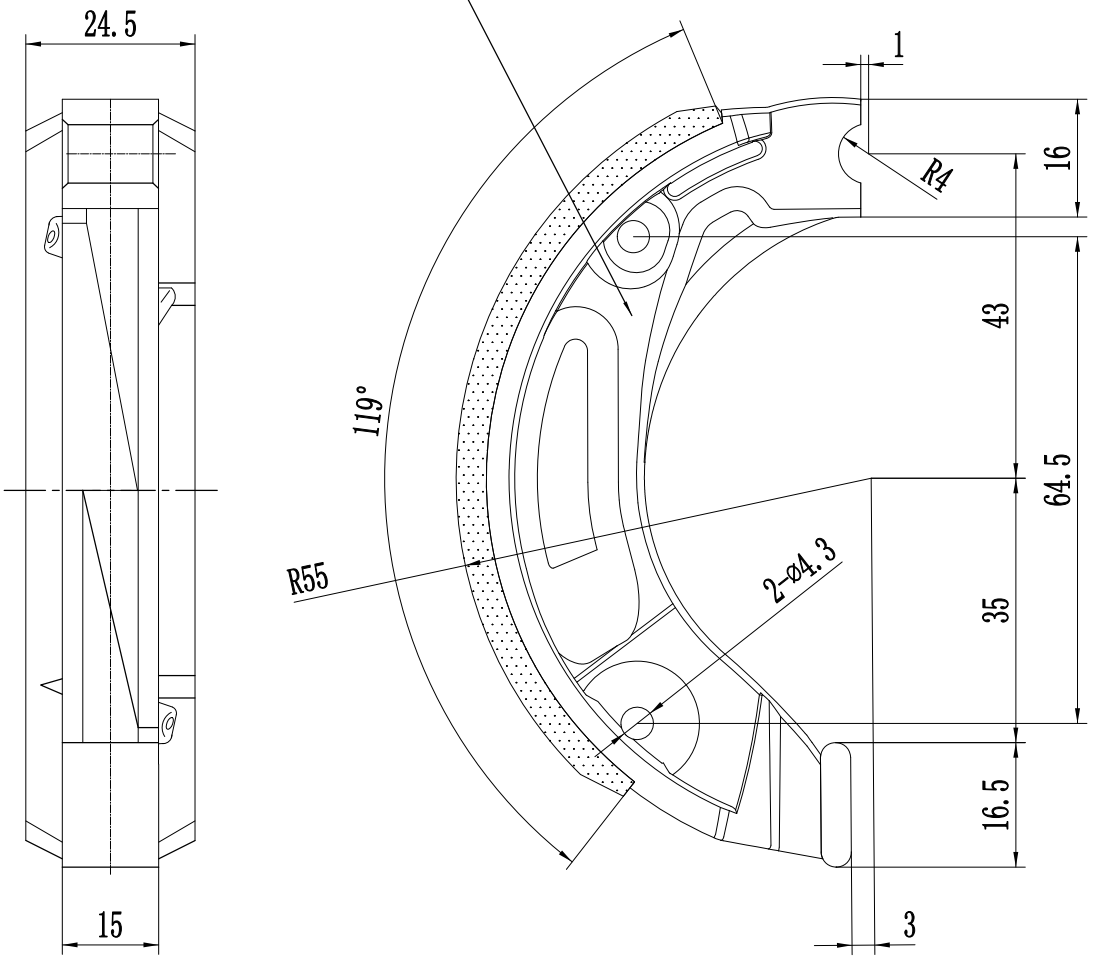

Make:CQYS
Type:01

Vehicle Type	Cub pro 125
Rear Brake Pads Assy	
Drawing No	Cub pro 125-30

e13*168/2013*01827*00
Société Nationale de Certification et d'Homologation

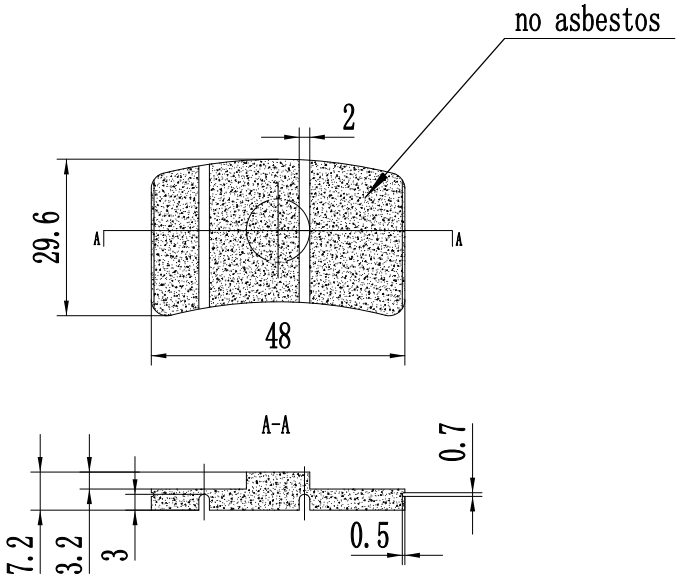

Vehicle Type	Cub pro 125
Front Brake Pad	
Drawing No	Cub pro 125-31

e13*168/2013*01827*00
Société Nationale de Certification et d'Homologation

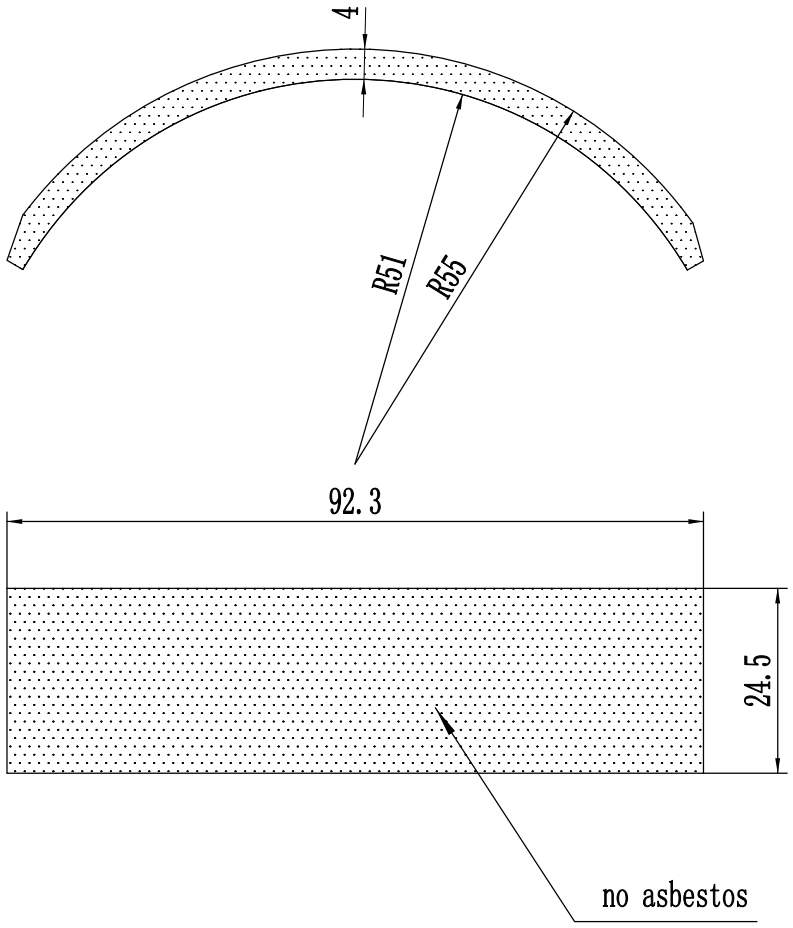

Vehicle Type	Cub pro 125
Rear Brake Pad	
Drawing No	Cub pro 125-32

e13*168/2013*01827*00

Société Nationale de Certification et d'Homologation

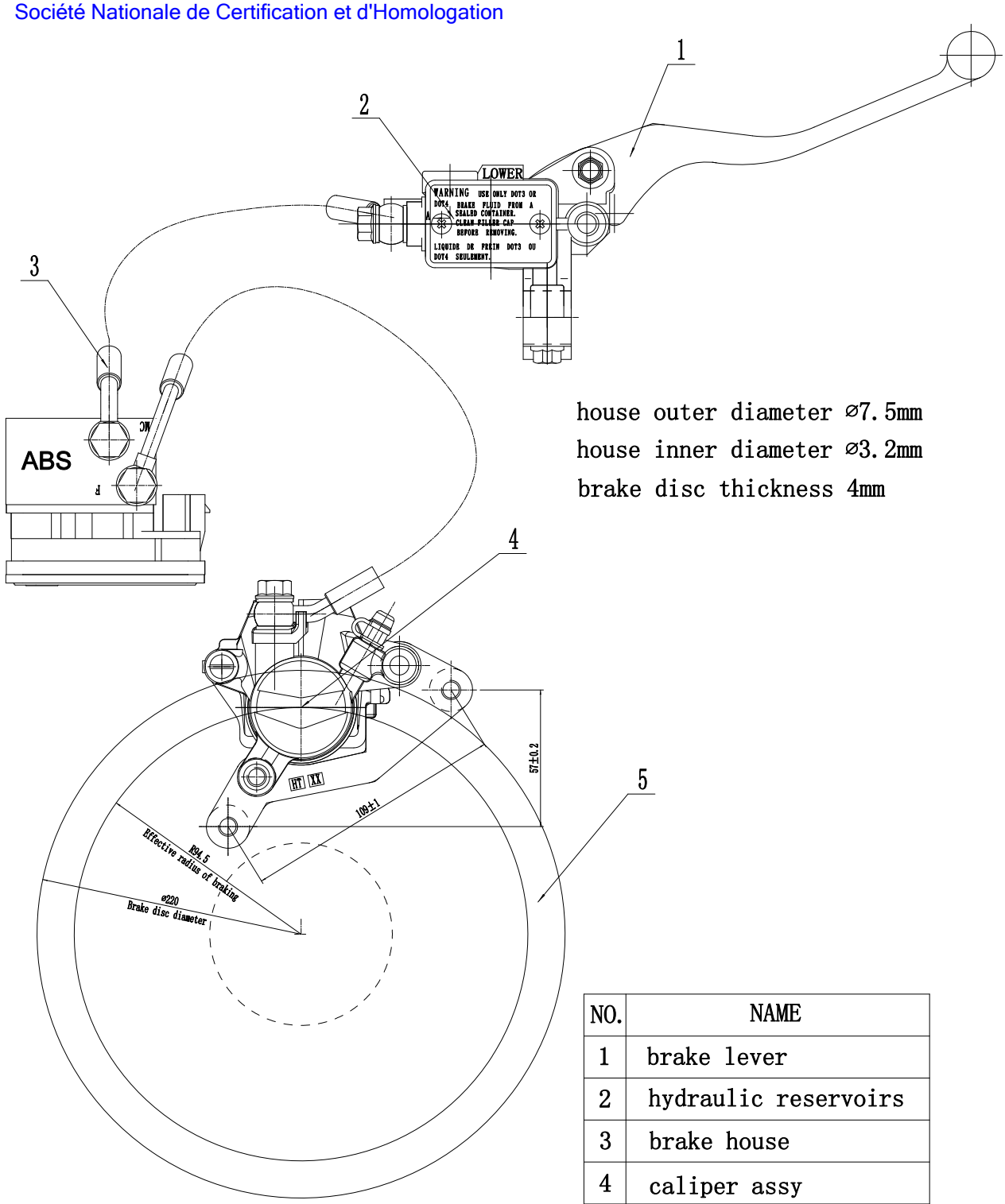

house outer diameter ⌀7.5mm

house inner diameter ⌀3.2mm

brake disc thickness 4mm

NO.	NAME
1	brake lever
2	hydraulic reservoirs
3	brake house
4	caliper assy
5	brake disc

Vehicle Type	Cub pro 125
Front Brake	
Drawing No	Cub pro 125-33

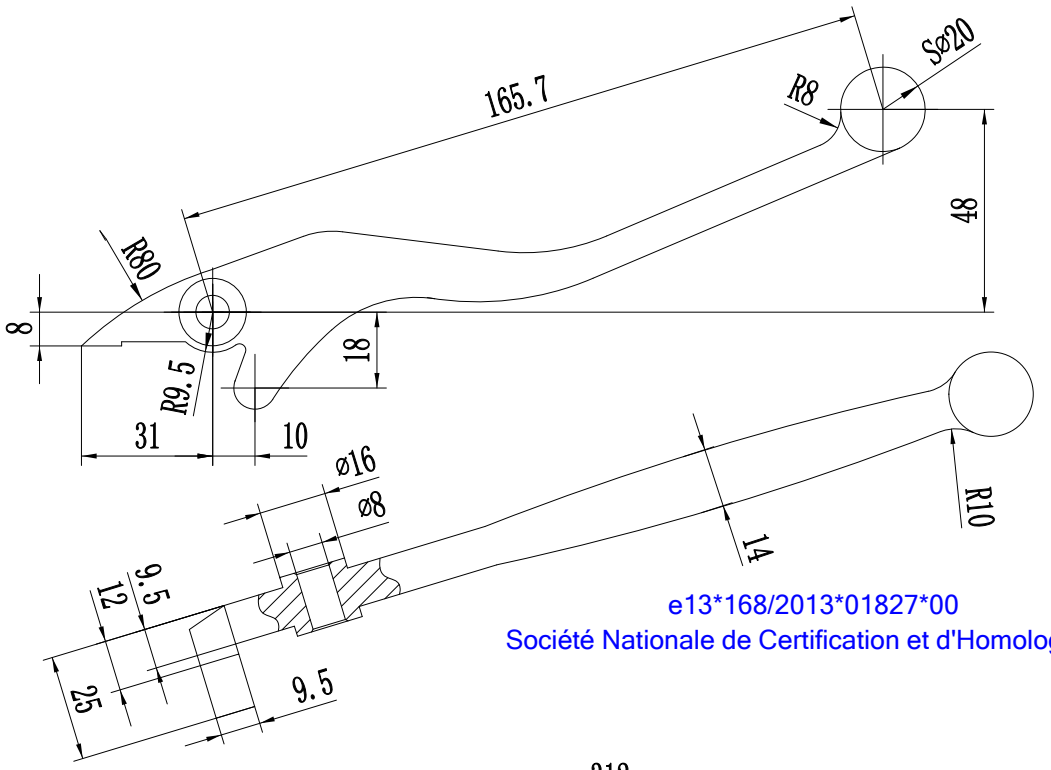

e13*168/2013*01827*00
Société Nationale de Certification et d'Homologation

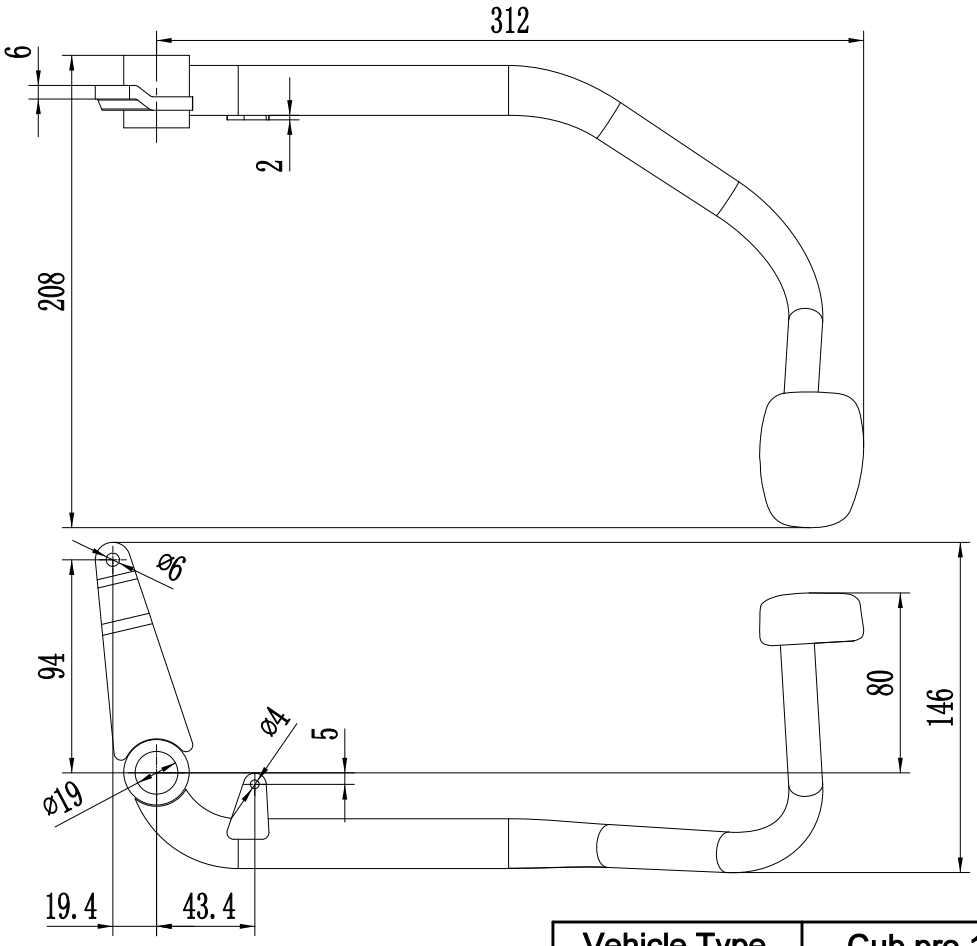

Vehicle Type	Cub pro 125
Hand Brake Lever and Foot Brake Pedal	
Drawing No	Cub pro 125-34

e13*168/2013*01827*00

Société Nationale de Certification et d'Homologation

Front Hydraulic Reservoir

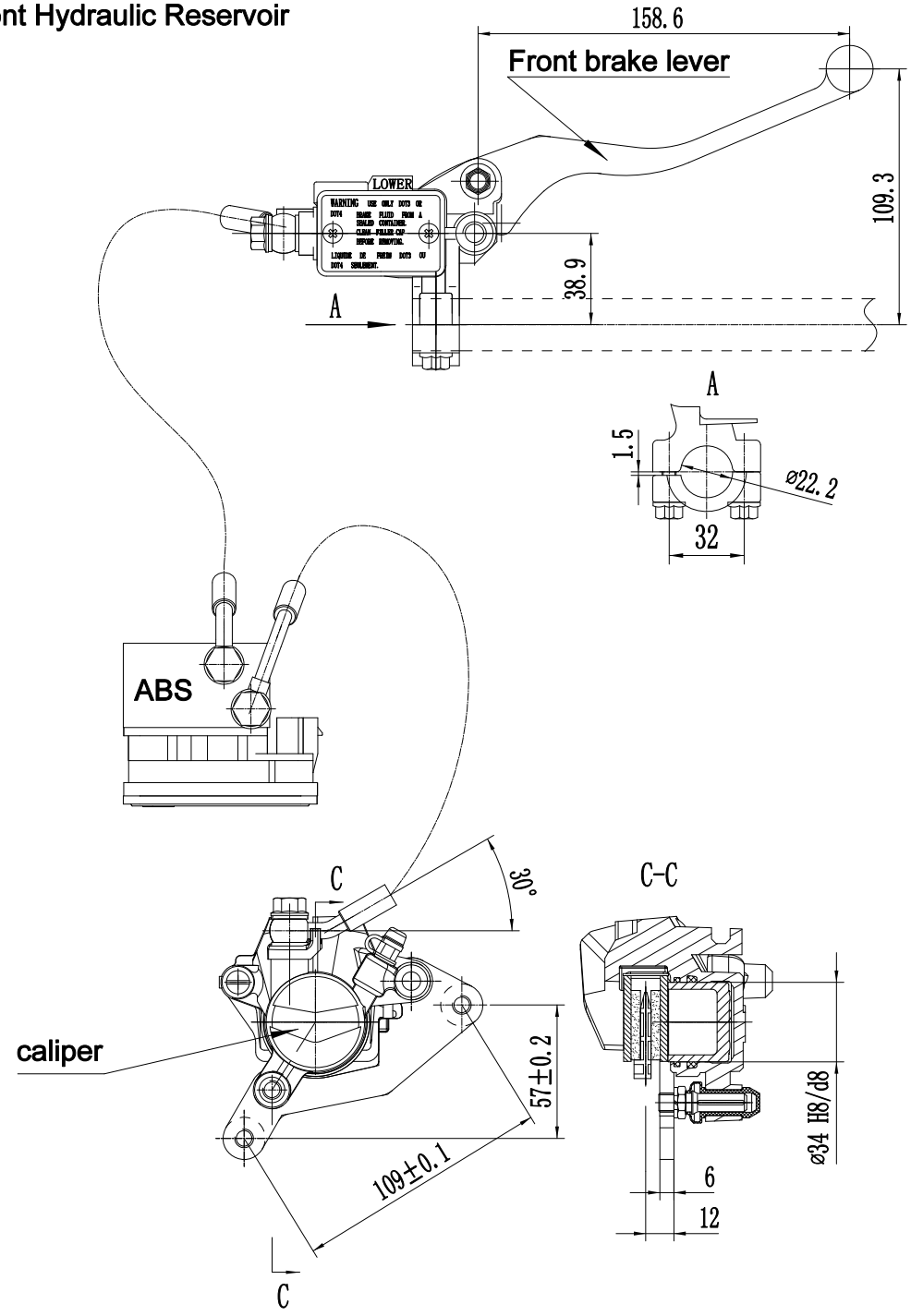

Vehicle Type	Cub pro 125
Hydraulic Reservoir	
Drawing No	Cub pro 125-35

Kamax Group Limited

Information document:168/2013-Cub pro 125-00
Application date:February 20,2023

Front brake
Make:HT
Type:HT F1

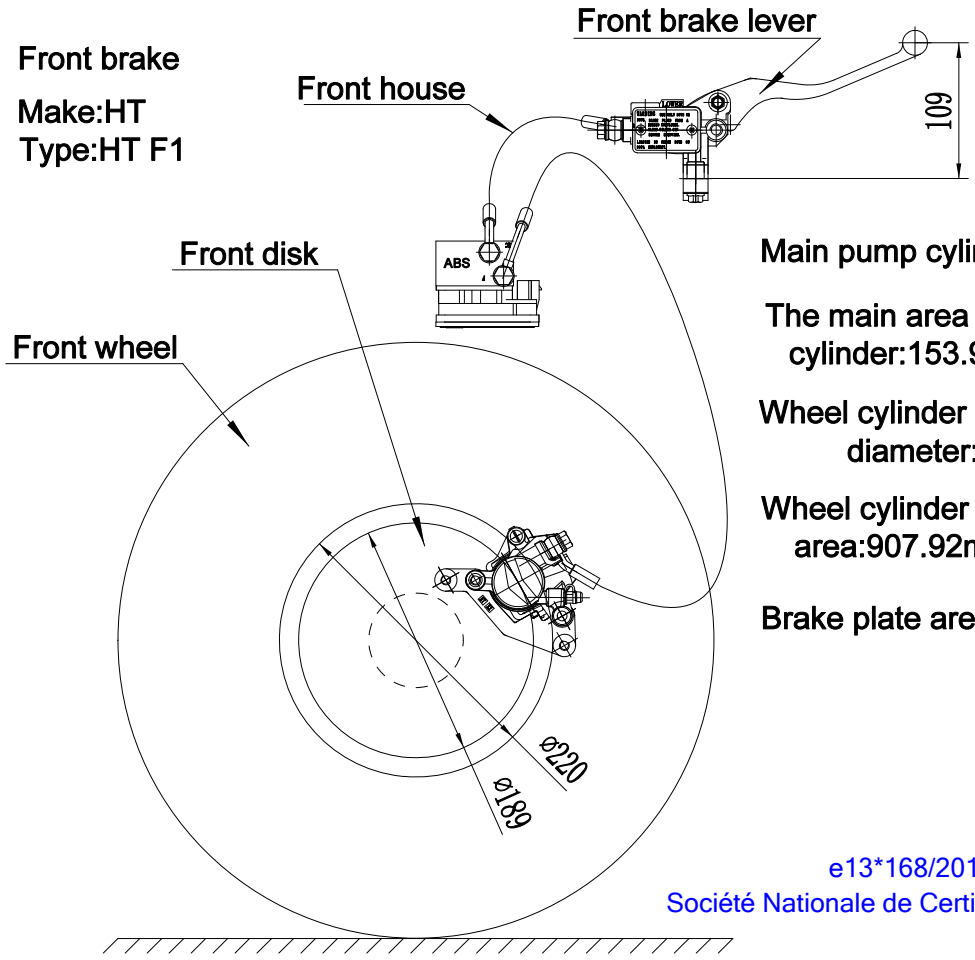

Main pump cylinder diameter:Ø14mm

The main area of pump cylinder:153.94mm²

Wheel cylinder piston cylinder diameter:Ø34mm

Wheel cylinder piston area:907.92mm²

Brake plate area:1292.08×2mm²

e13*168/2013*01827*00
Société Nationale de Certification et d'Homologation

Rear brake
Make:CQYS
Type:T125

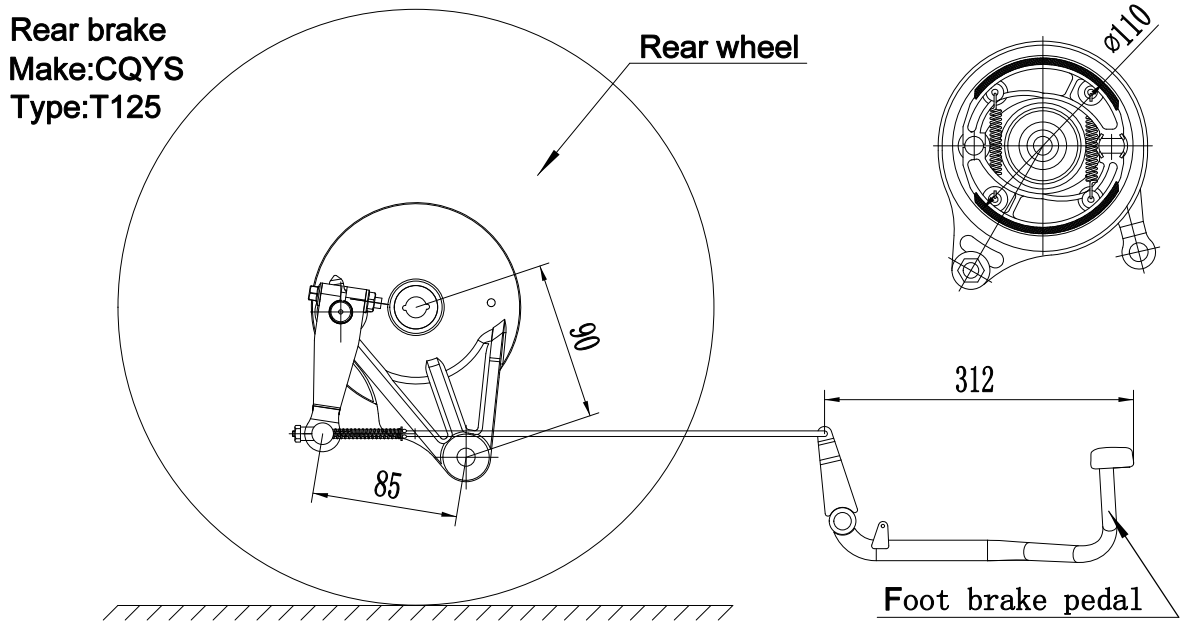

Brake plate area:2798.6×2mm²

Vehicle Type	Cub pro 125
Brake System	
Drawing No	Cub pro 125-36

e13*168/2013*01827*00
Société Nationale de Certification et d'Homologation

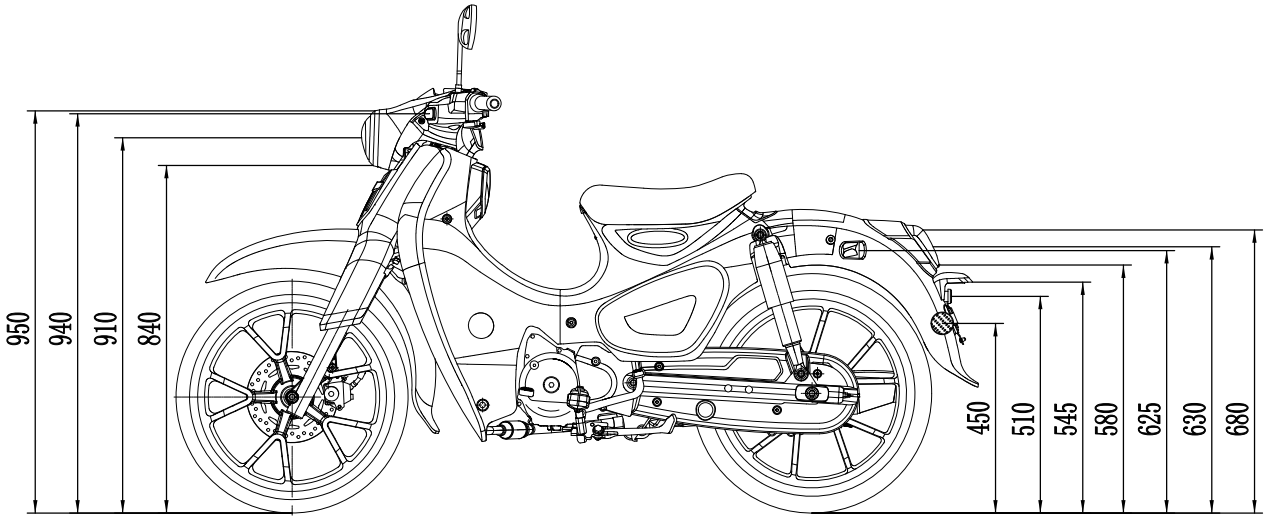

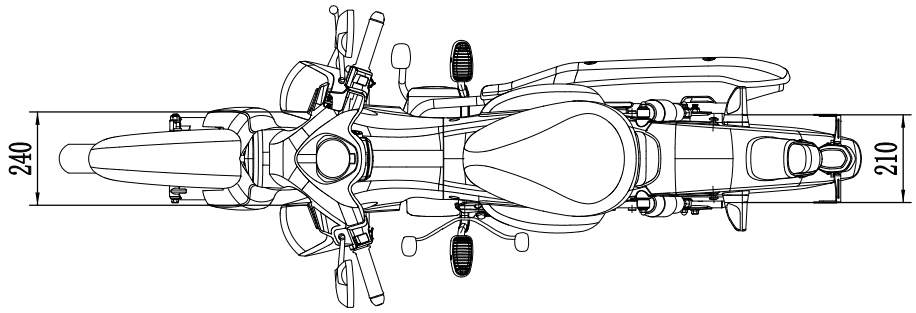

Vehicle Type	Cub pro 125
Lighting Installation	
Drawing No	Cub pro 125-37

Kamax Group Limited

Information document:168/2013-Cub pro 125-00
Application date:February 20,2023

e13*168/2013*01827*00
Société Nationale de Certification et d'Homologation

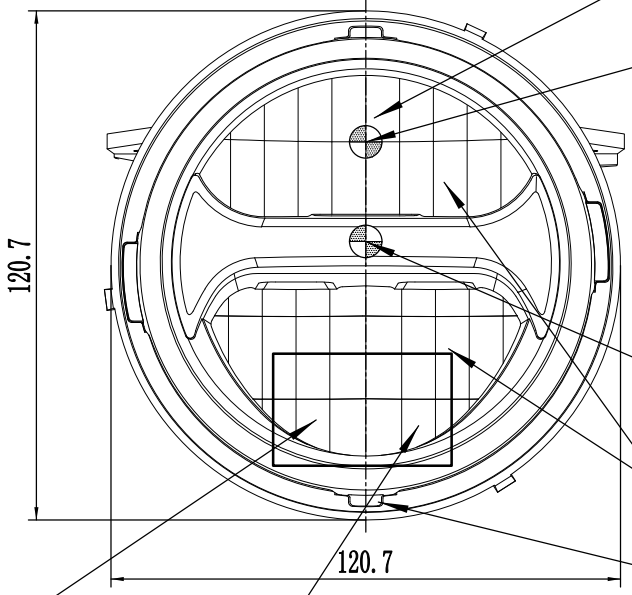

Approval Mark
Marking:E8*148R00/04*14022*00(Front position lamp)

Approval Mark
Marking:E8*149R00/05*14022*00(Head lamp)

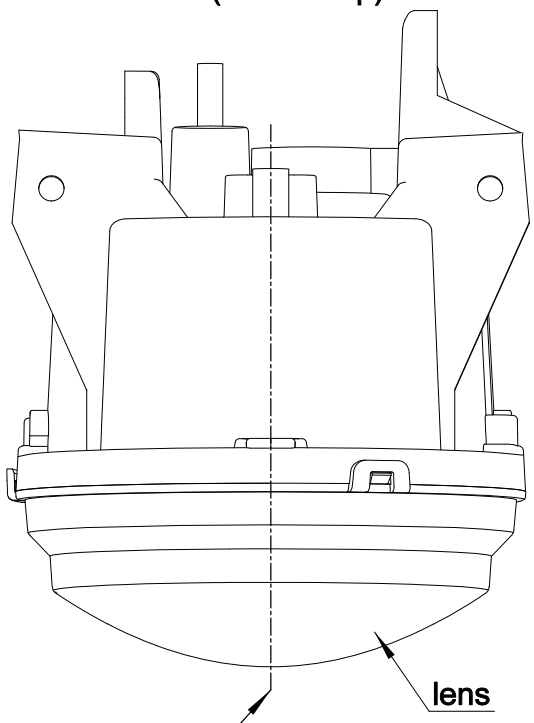

make:OH
type:T125-1

Vehicle Type	Cub pro 125
Head Light	
Drawing No	Cub pro 125-38

Kamax Group Limited

Information document:168/2013-Cub pro 125-00
Application date:February 20,2023

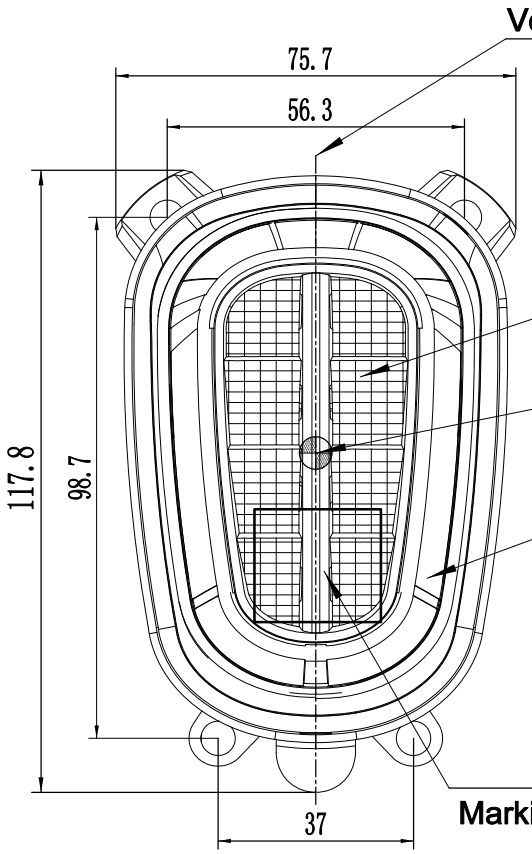

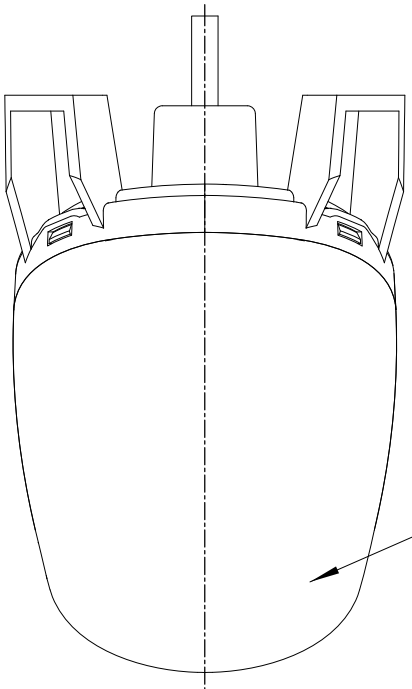

make:OH
type:T125-2

reference axis
Longitudinal plane of vehicle

e13*168/2013*01827*00
Société Nationale de Certification et d'Homologation

Vehicle Type	Cub pro 125
Stop Light	
Drawing No	Cub pro 125-39

Kamax Group Limited

Information document:168/2013-Cub pro 125-00
Application date:February 20,2023

Front direction indicator lamp

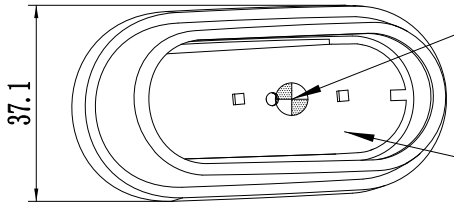

Center of reference

Front direction indicator lamp

Approval Mark

Marking:E8*148R00/04*14024*00

e13*168/2013*01827*00
Société Nationale de Certification et d'Homologation

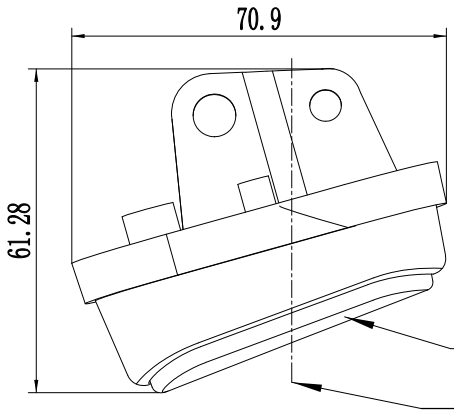

make:OH
type:T125-3

lens

Axis of reference

Longitudinal Plane of Vehicle

rear direction indicator lamp

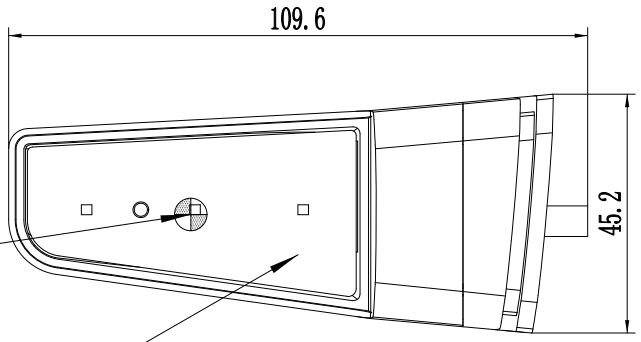

Center of reference

rear direction indicator lamp

Approval Mark

Marking:E8*148R00/04*14025*00

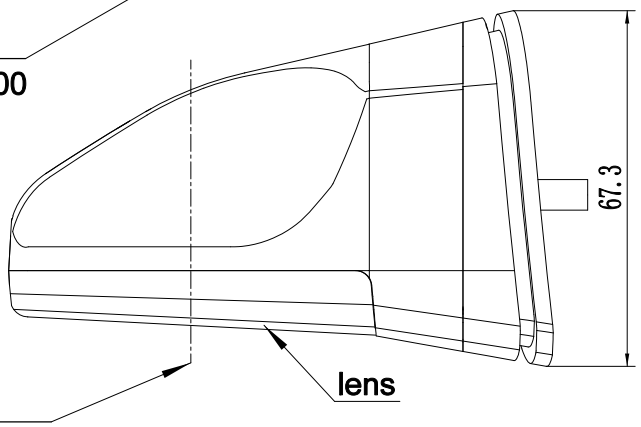

make:OH
type:T125-4

lens

Axis of reference

Longitudinal Plane of Vehicle

Vehicle Type	Cub pro 125
Direction indicator Lamp	
Drawing No	Cub pro 125-40

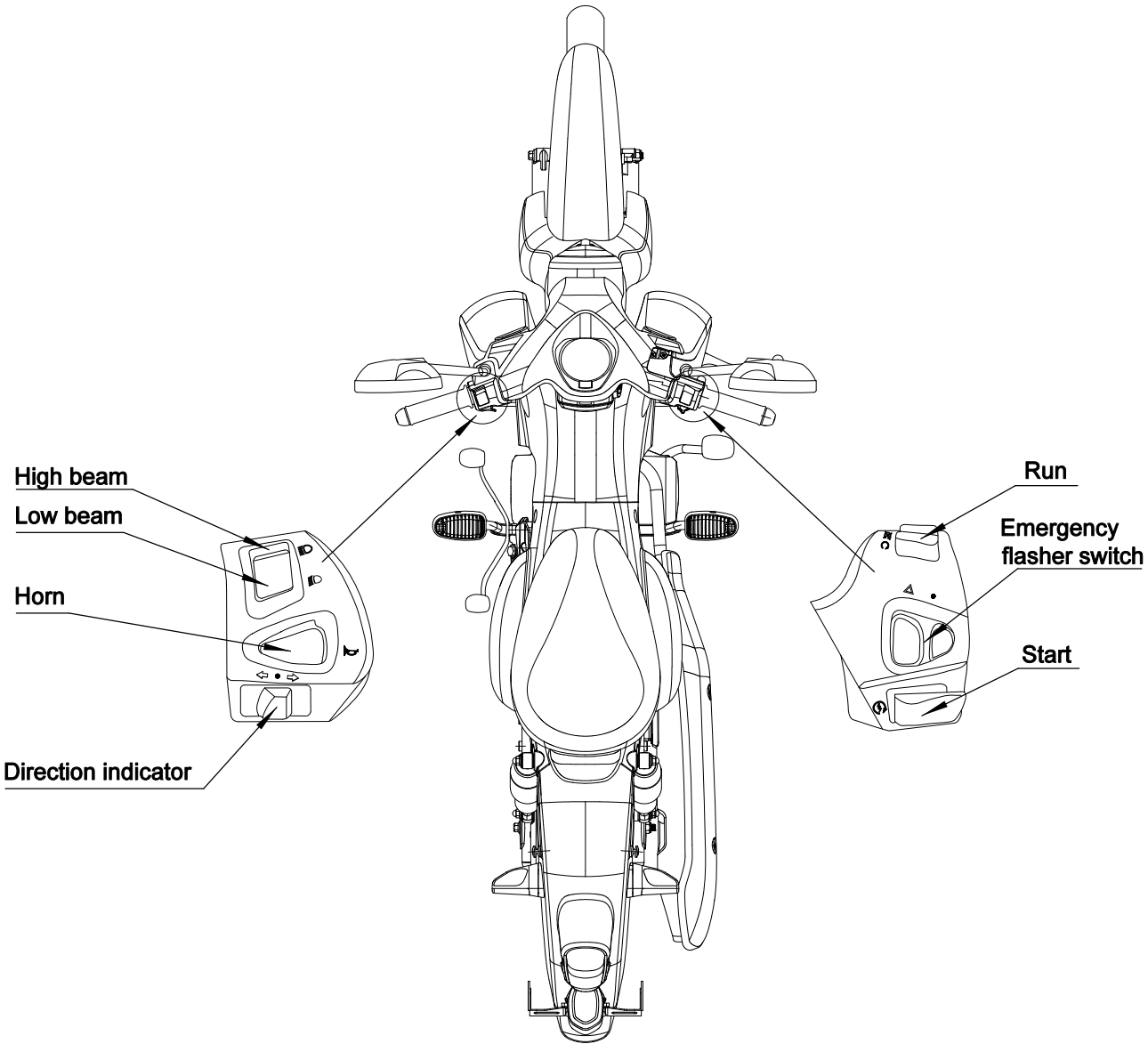

e13*168/2013*01827*00
Société Nationale de Certification et d'Homologation

Vehicle Type	Cub pro 125
Control I.D.,Indicator and Tell-tale	
Drawing No	Cub pro 125-41

e13*168/2013*01827*00
Société Nationale de Certification et d'Homologation

Statuory InScriptons
TEXT height: 3mm
TEXT depth: 0.2mm

position: L
X: 530mm Y: 21mm Z: 425mm

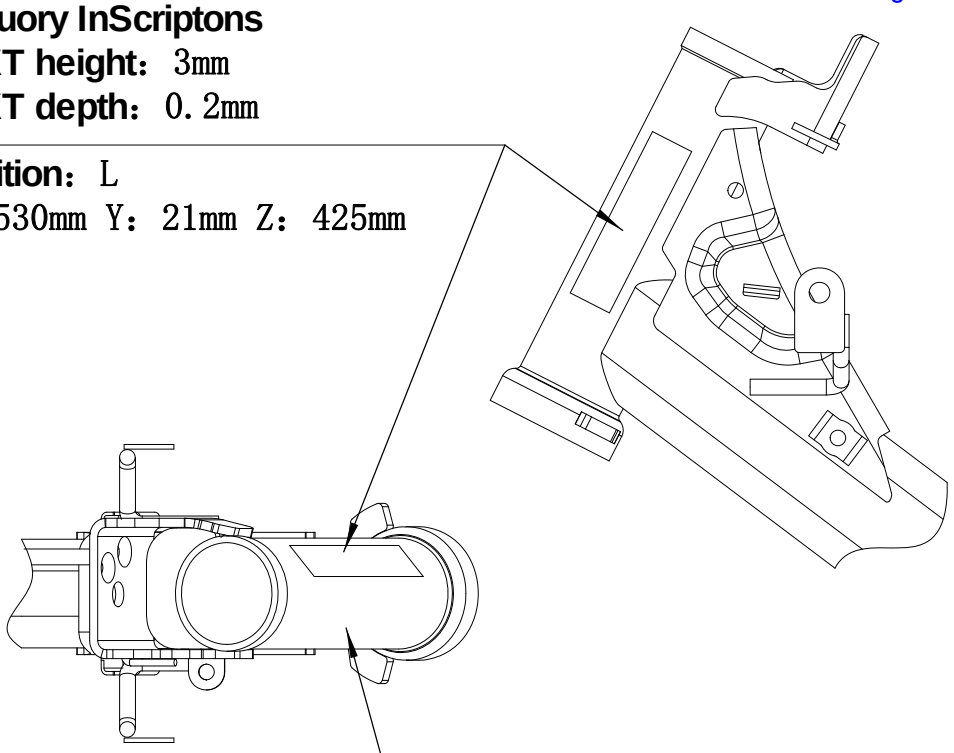

VIN number: ☆R71XCJL1××××××××××☆
TEXT height: 10mm
TEXT depth: 0.3mm

position: R
X: 530mm Y: 21mm Z: 425mm

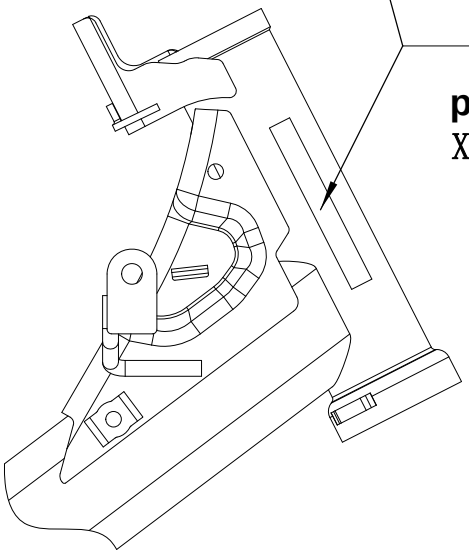

Vehicle Type	Cub pro 125
Location of the Chassis Number and Statutory Plate	
Drawing No	Cub pro 125-42

e13*168/2013*01827*00
Société Nationale de Certification et d'Homologation

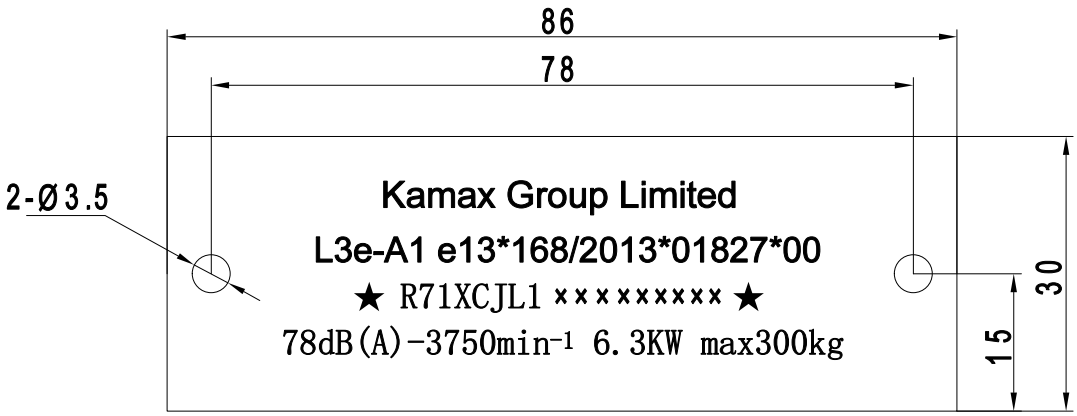

Text height:3mm

Text depth:0.2mm

Vehicle Type	Cub pro 125
Manufacturer's Data Plate	
Drawing No	Cub pro 125-43

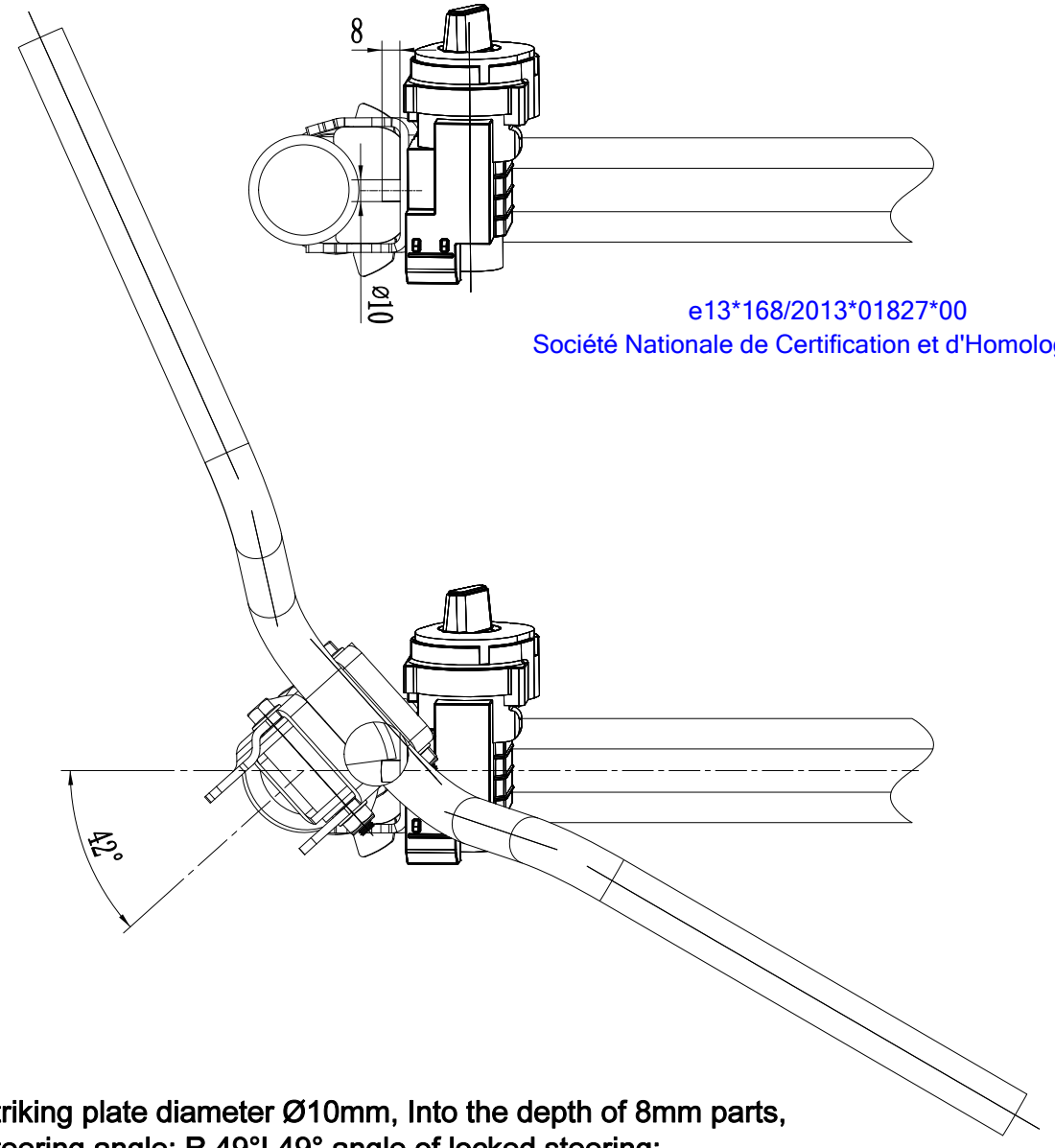

e13*168/2013*01827*00
Société Nationale de Certification et d'Homologation

striking plate diameter Ø10mm, Into the depth of 8mm parts,
steering angle: R 49°L49° angle of locked steering:
left 42°.

Vehicle Type	Cub pro 125
Anti-theft Device	
Drawing No	Cub pro 125-44

e13*168/2013*01827*00
Société Nationale de Certification et d'Homologation

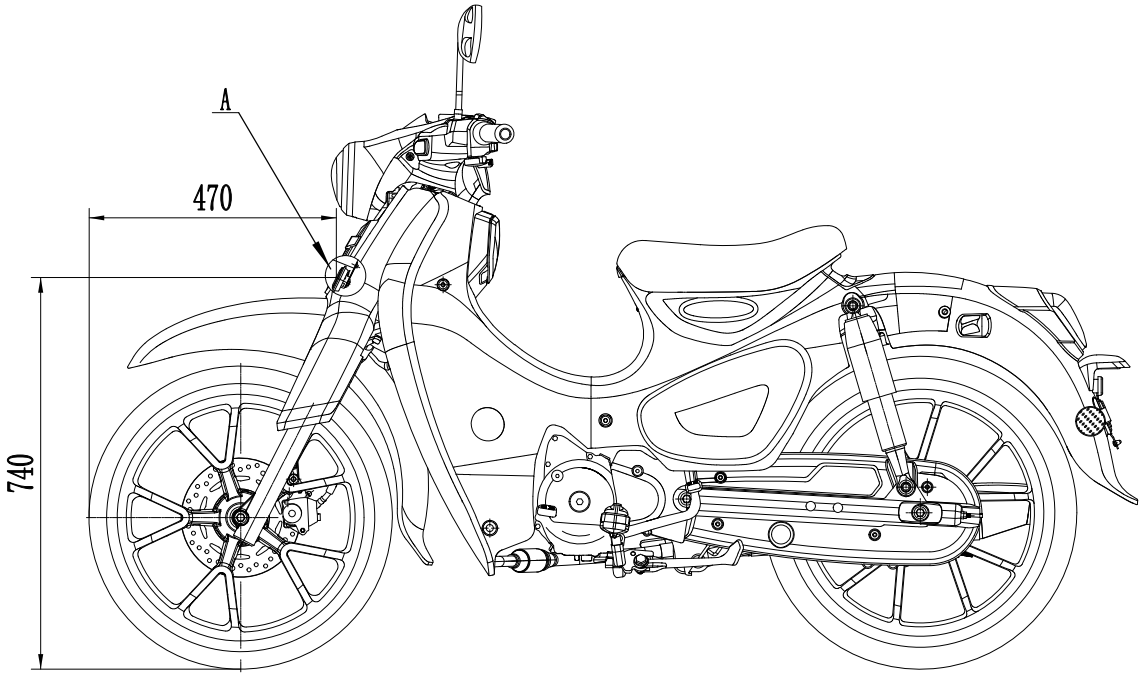

A

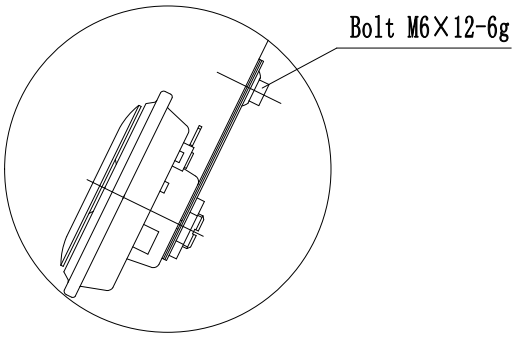

Make：ZHONG YE
Type：DL126J-12V
Approval no.:E9*28R00/05*6693*00

Vehicle Type	Cub pro 125
Horn installation	
Drawing No	Cub pro 125-45

e13*168/2013*01827*00
Société Nationale de Certification et d'Homologation

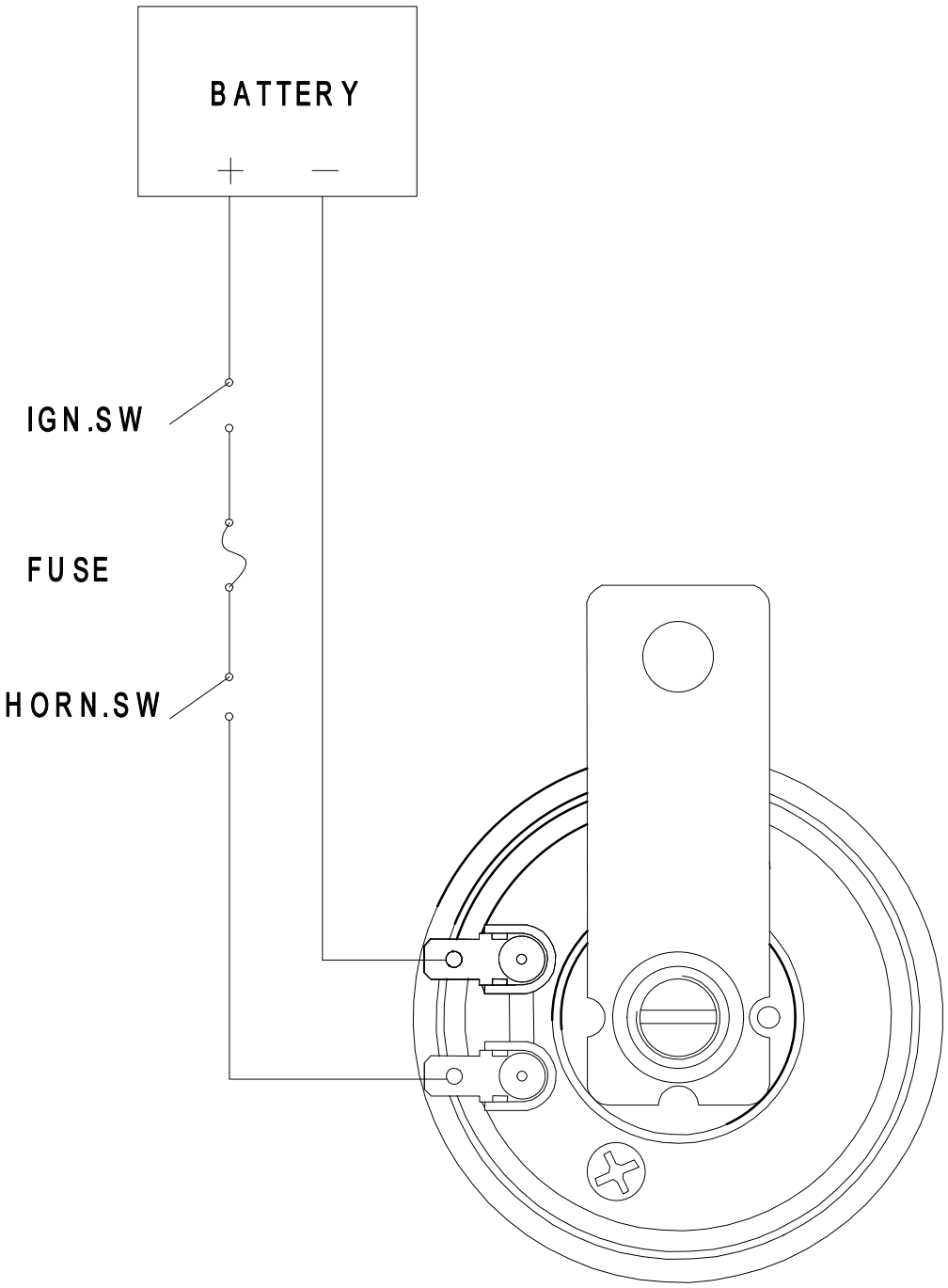

Vehicle Type	Cub pro 125
Electric circuit of horn	
Drawing No	Cub pro 125-46

e13*168/2013*01827*00

Société Nationale de Certification et d'Homologation

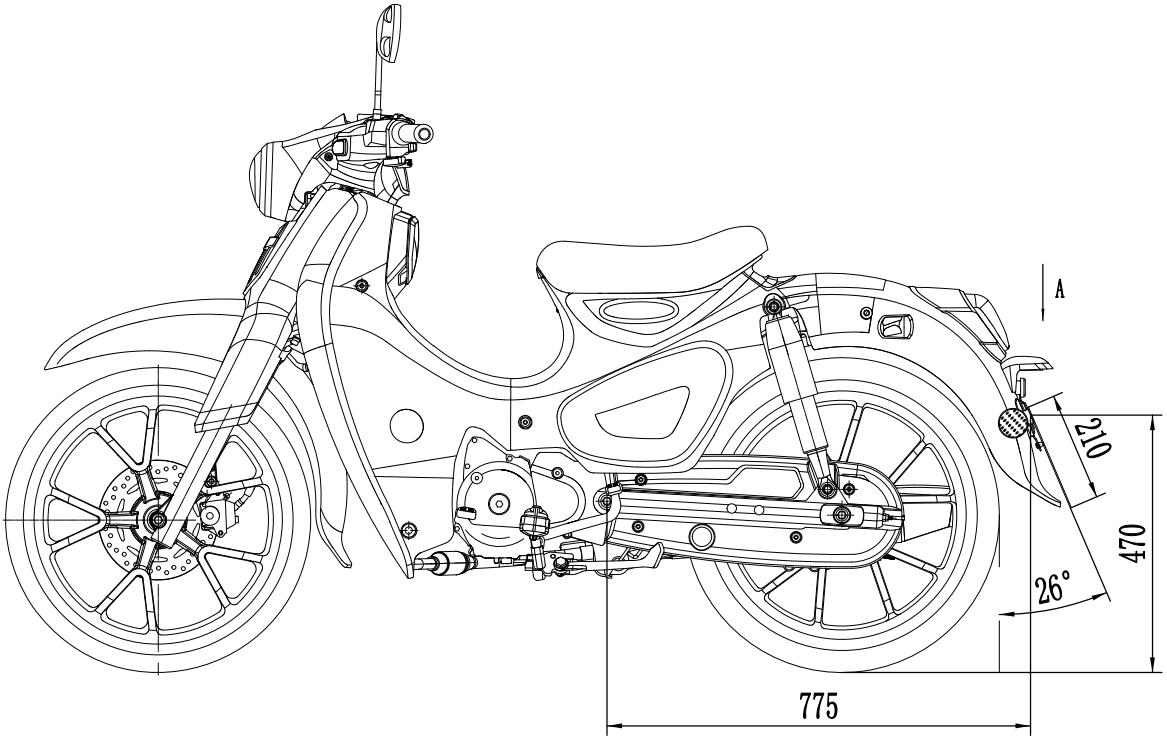

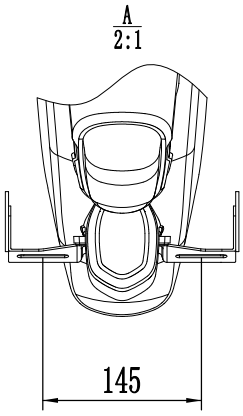

Vehicle Type	Cub pro 125
Space for Rear Registration Plate	
Drawing No	Cub pro 125-47

Kamax Group Limited

Information document:168/2013-Cub pro 125-00
Application date:February 20,2023

e13*168/2013*01827*00
Société Nationale de Certification et d'Homologation

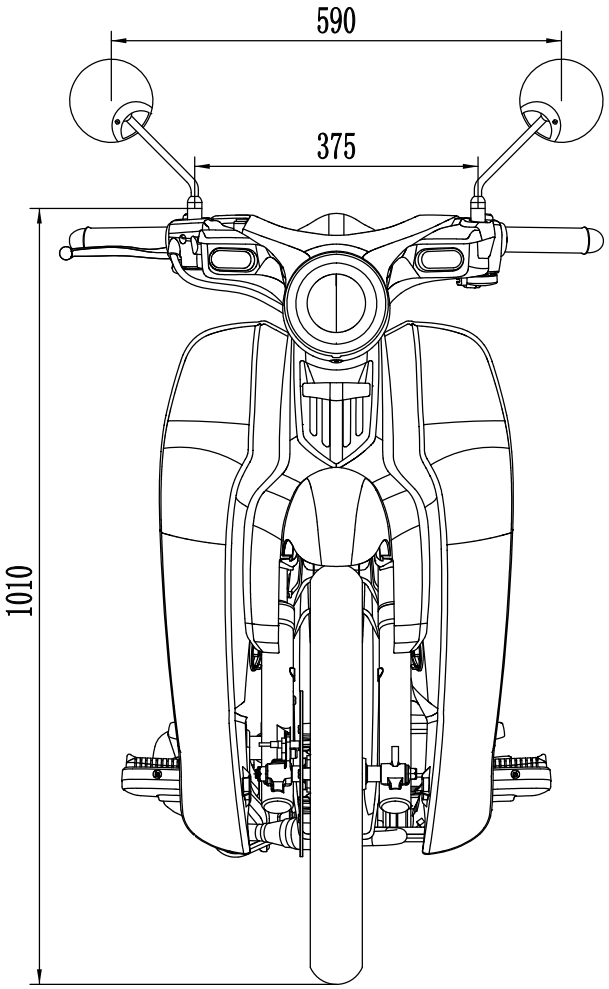

Make：XINXIN
Type：XX288-7
Approval No.: E13*81R00/02*9958*00

Vehicle Type	Cub pro 125
Mirror Position	
Drawing No	Cub pro 125-48

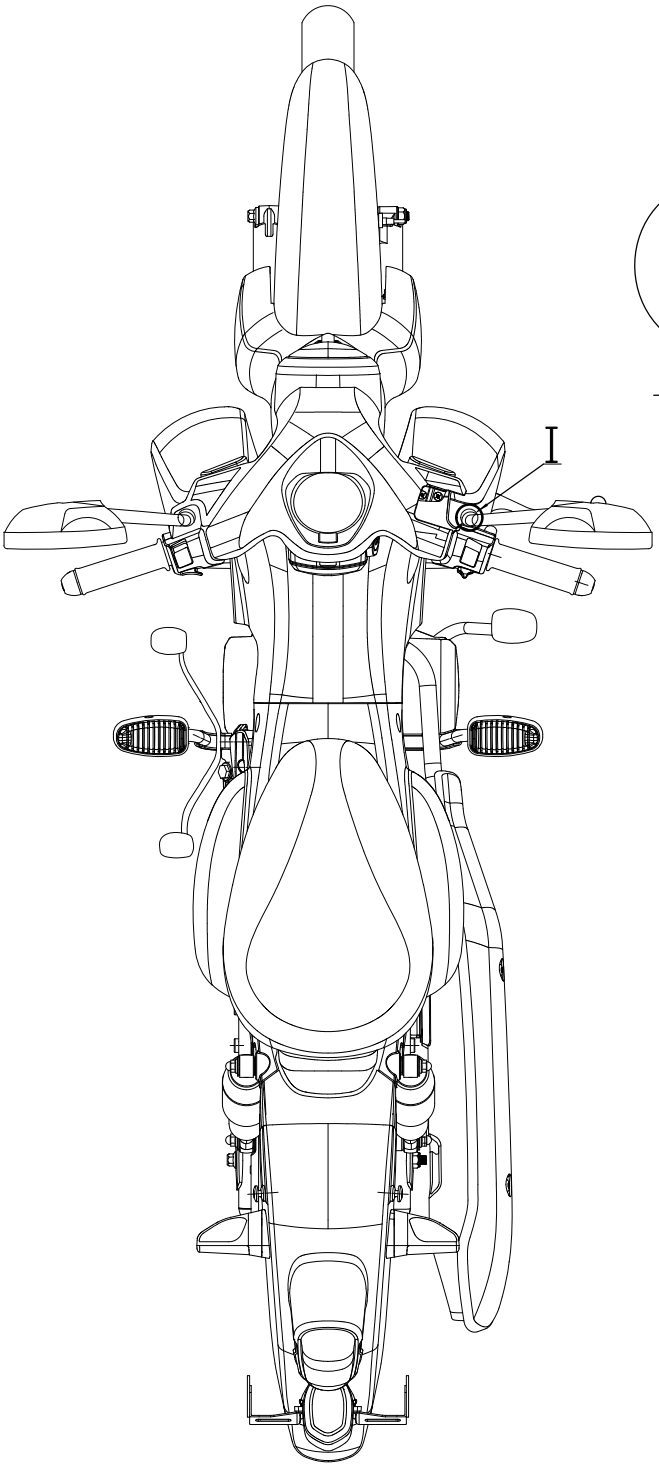

e13*168/2013*01827*00
Société Nationale de Certification et d'Homologation

Vehicle Type	Cub pro 125
Mirror Installation	
Drawing No	Cub pro 125-49

e13*168/2013*01827*00
Société Nationale de Certification et d'Homologation

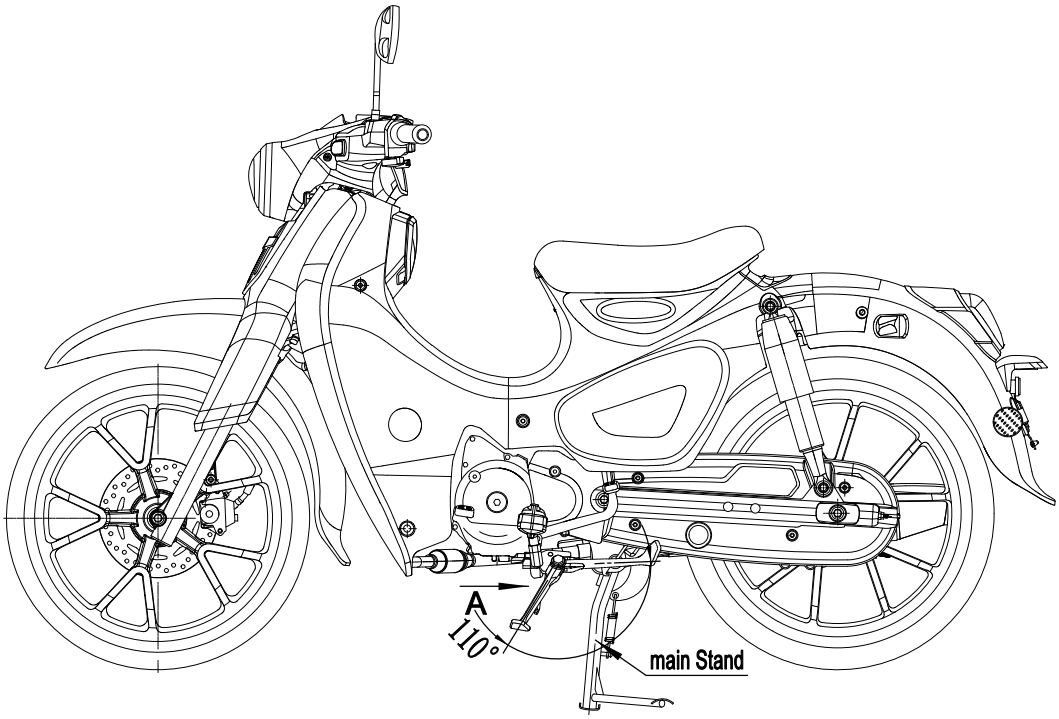

A
3:1

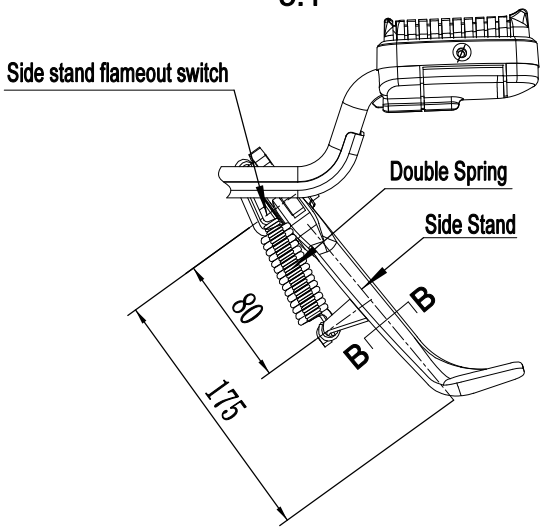

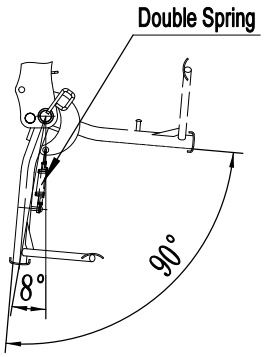

B-B
6:1

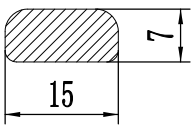

Vehicle Type	Cub pro 125
Stands	
Drawing No	Cub pro 125-50

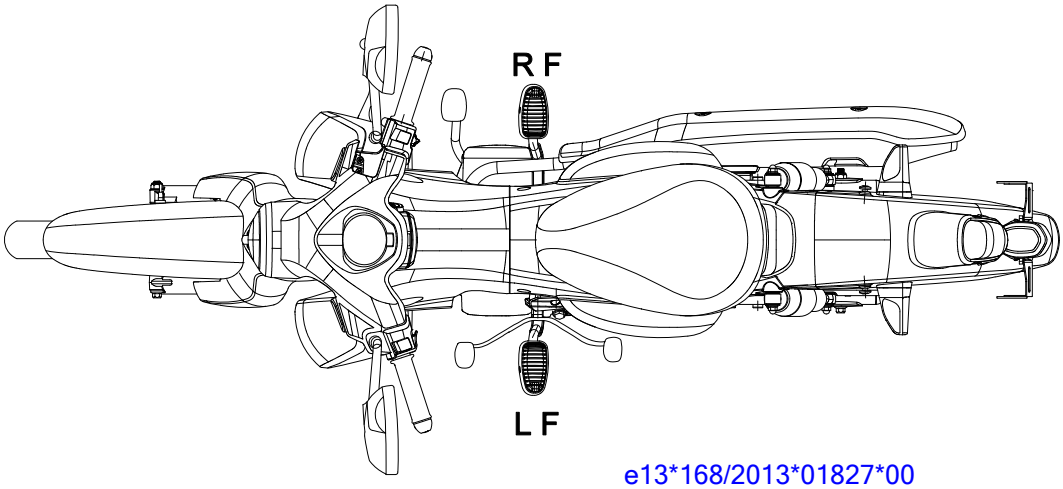

e13*168/2013*01827*00
Société Nationale de Certification et d'Homologation

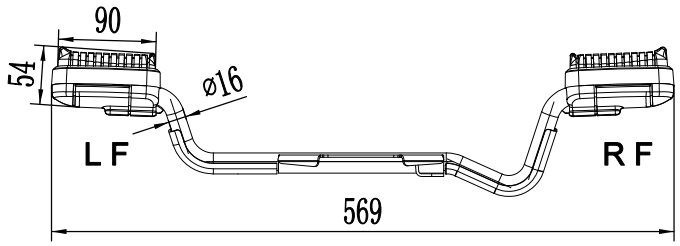

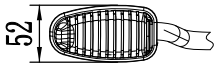

Vehicle Type	Cub pro 125
Footrests arrangement(Version1)	
Drawing No	Cub pro 125-51

e13*168/2013*01827*00

Société Nationale de Certification et d'Homologation

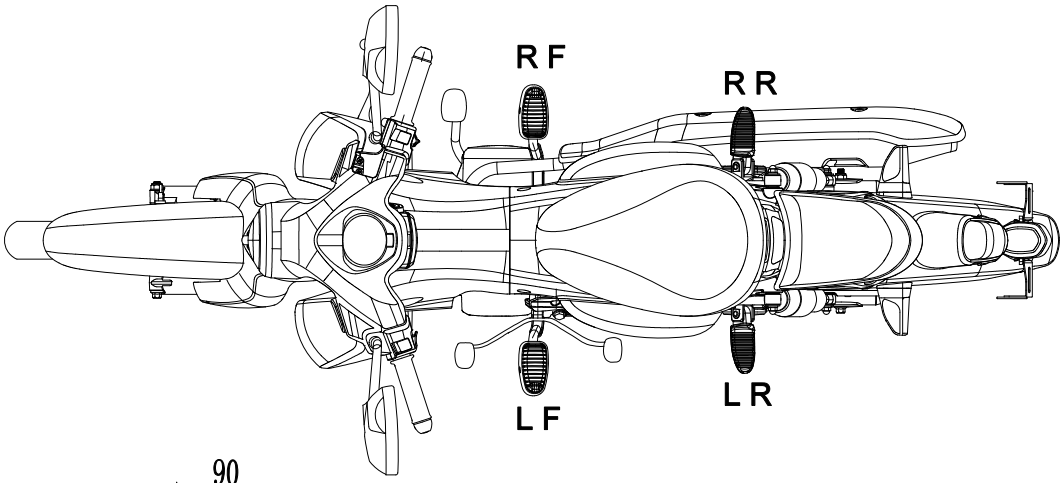

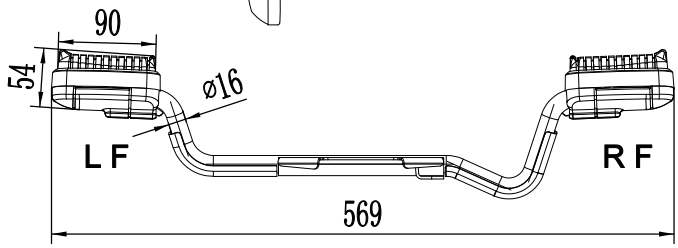

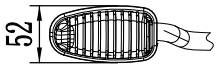

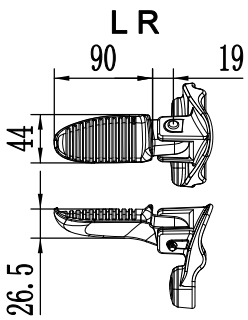

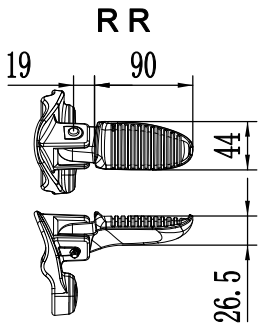

Vehicle Type	Cub pro 125
Footrests arrangement(Version2)	
Drawing No	Cub pro 125-51-1

e13*168/2013*01827*00
Société Nationale de Certification et d'Homologation

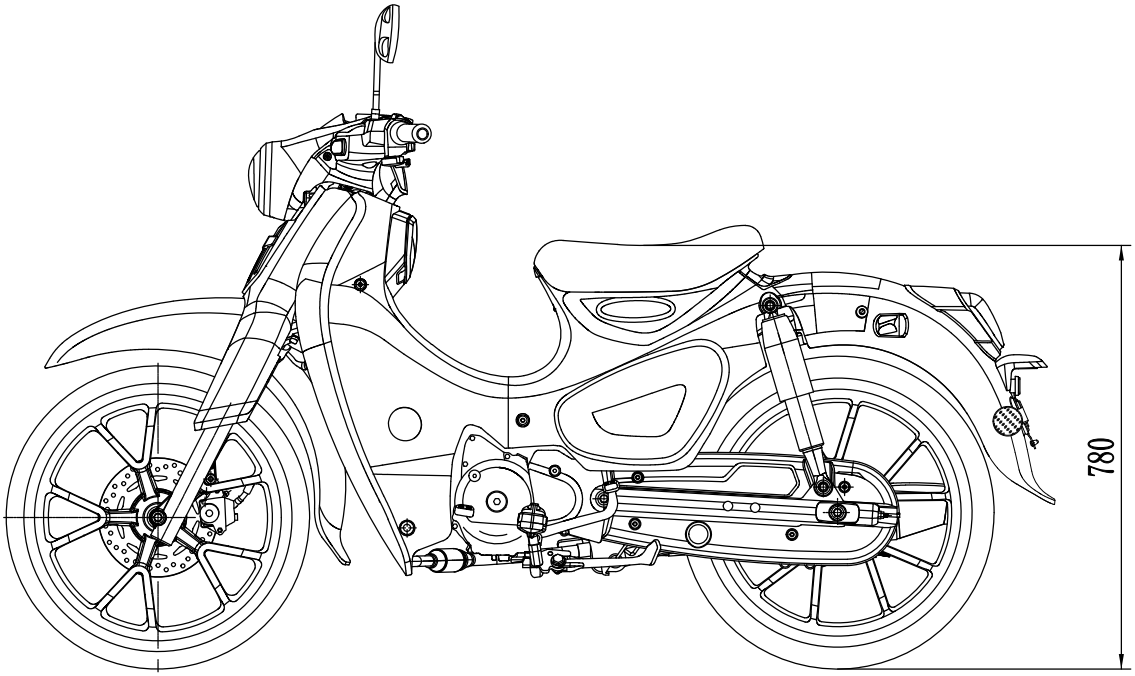

Saddle height:780

Vehicle Type	Cub pro 125
Saddle height(Version1)	
Drawing No	Cub pro 125-52

e13*168/2013*01827*00
Société Nationale de Certification et d'Homologation

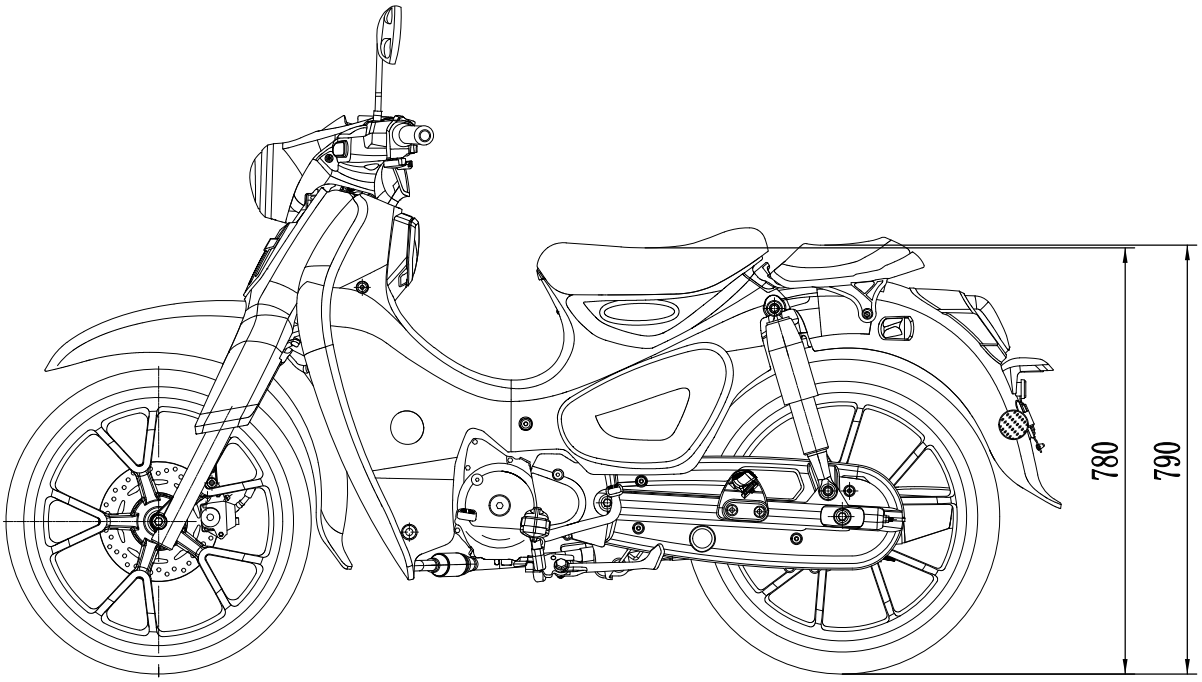

Front saddle height:780
Rear saddle height:790

Vehicle Type	Cub pro 125
Saddle height(Version2)	
Drawing No	Cub pro 125-52-1

e13*168/2013*01827*00
Société Nationale de Certification et d'Homologation

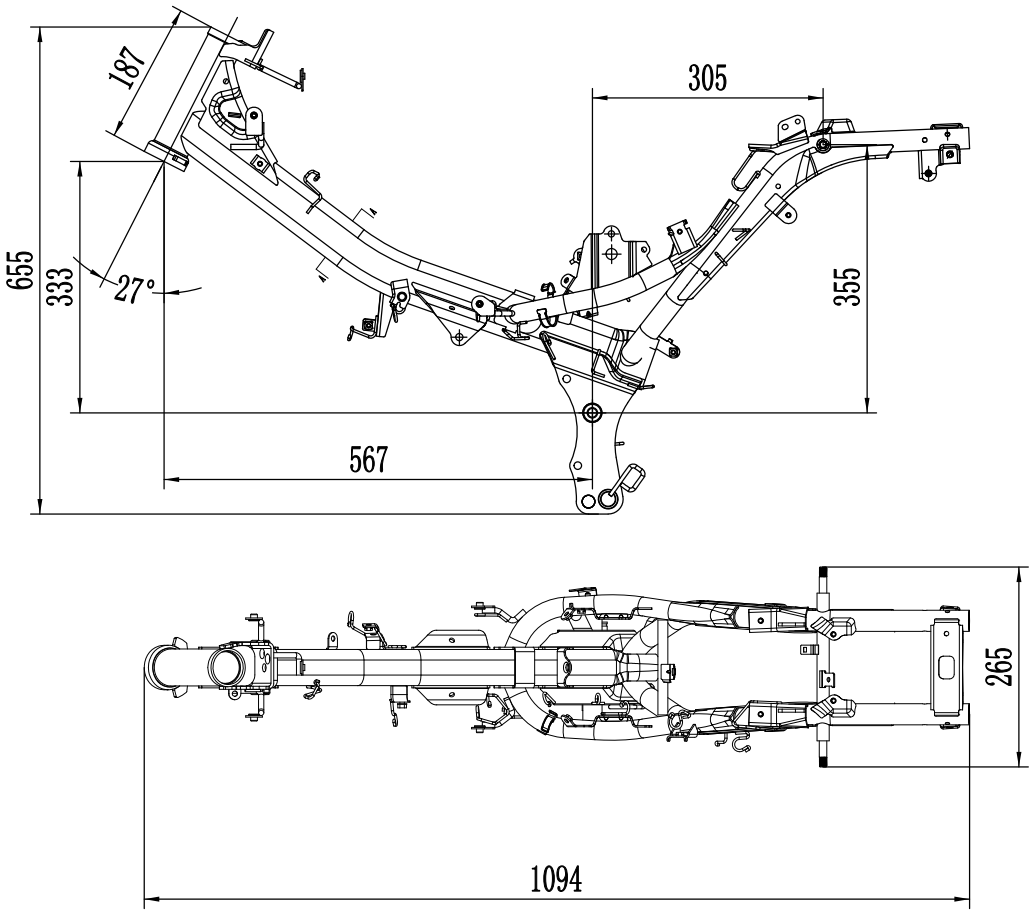

material of main beam：Q235 58×50×3-GB/T3094

Vehicle Type	Cub pro 125
Chassis	
Drawing No	Cub pro 125-53

Kamax Group Limited

Information document:168/2013-Cub pro 125-00
Application date:February 20,2023

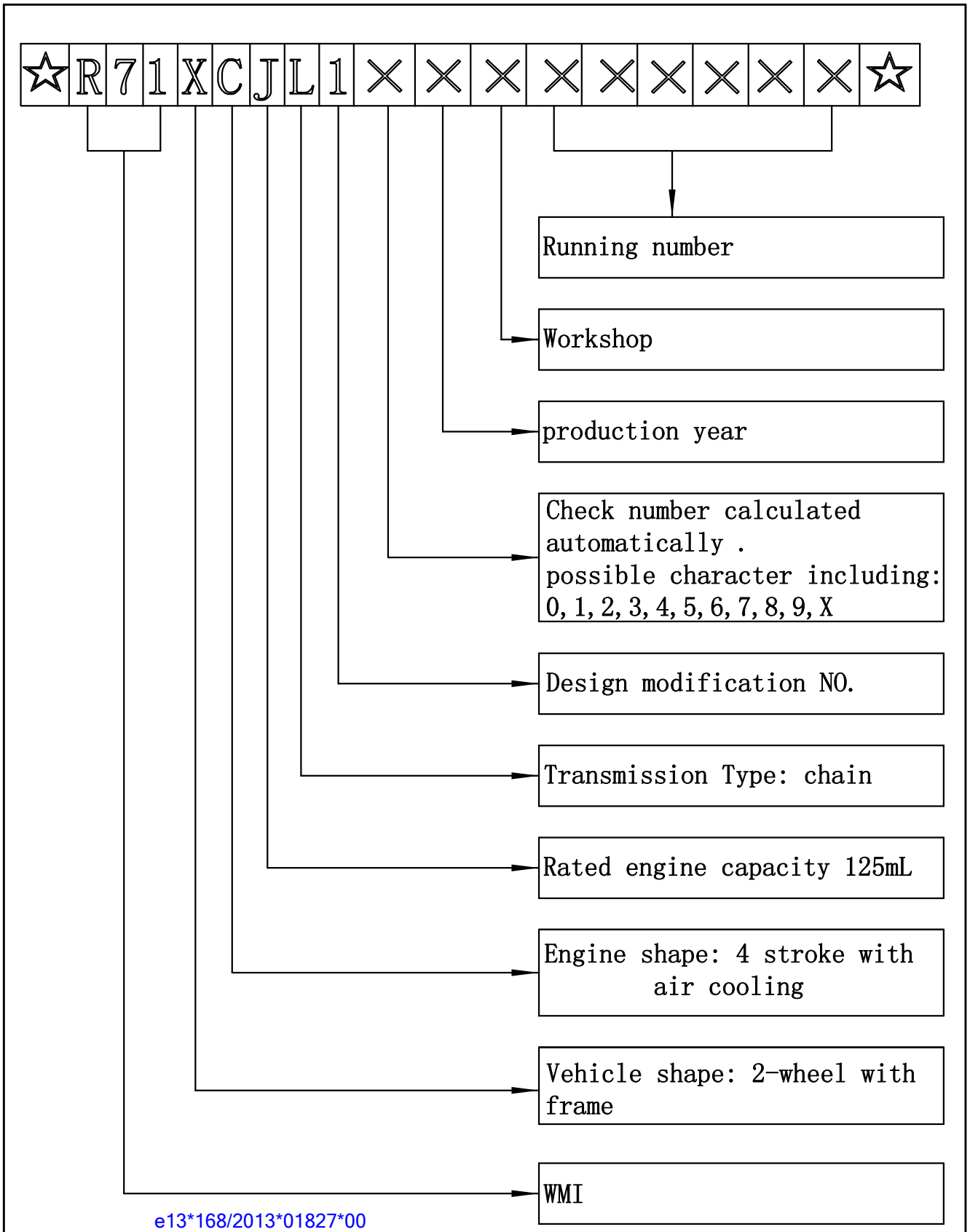

e13*168/2013*01827*00
Société Nationale de Certification et d'Homologation

Vehicle Type	Cub pro 125
VIN Structure	
Drawing No	Cub pro 125-54

e13*168/2013*01827*00
Société Nationale de Certification et d'Homologation

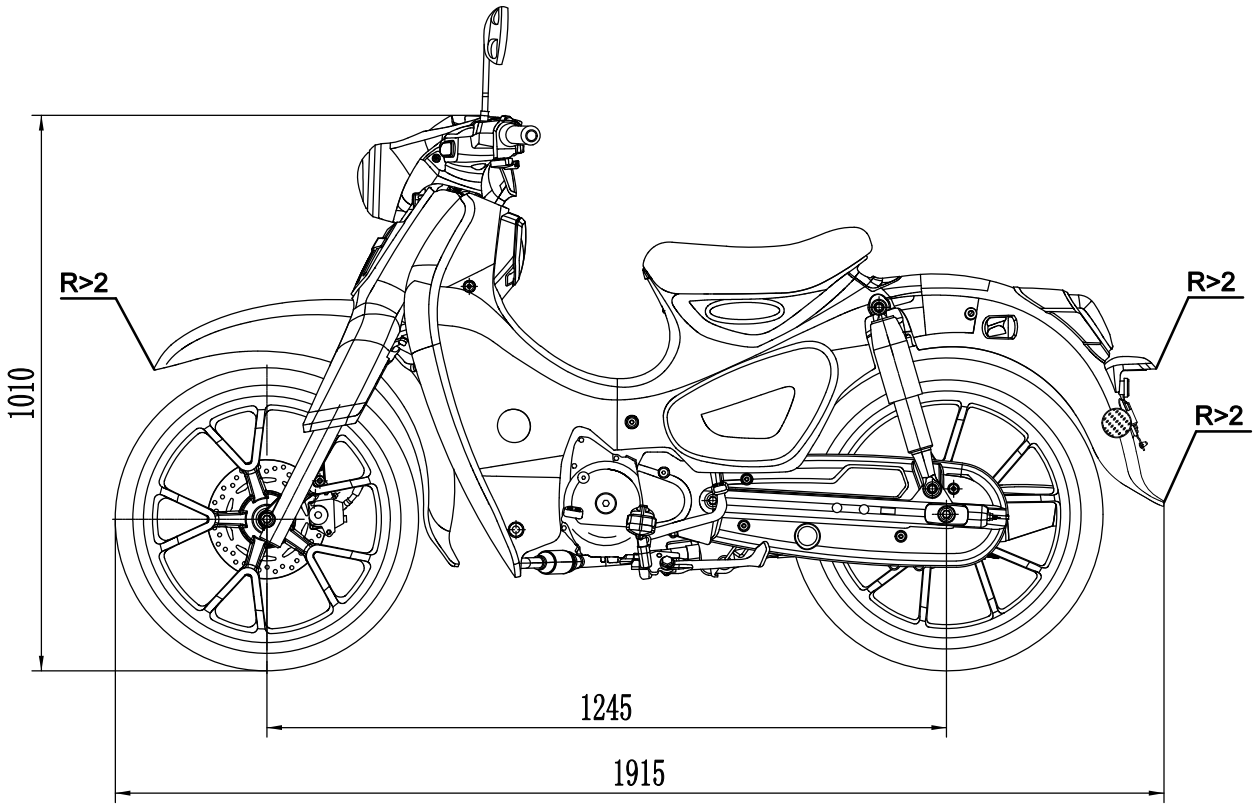

Vehicle Type	Cub pro 125
External Projection	
Drawing No	Cub pro 125-55

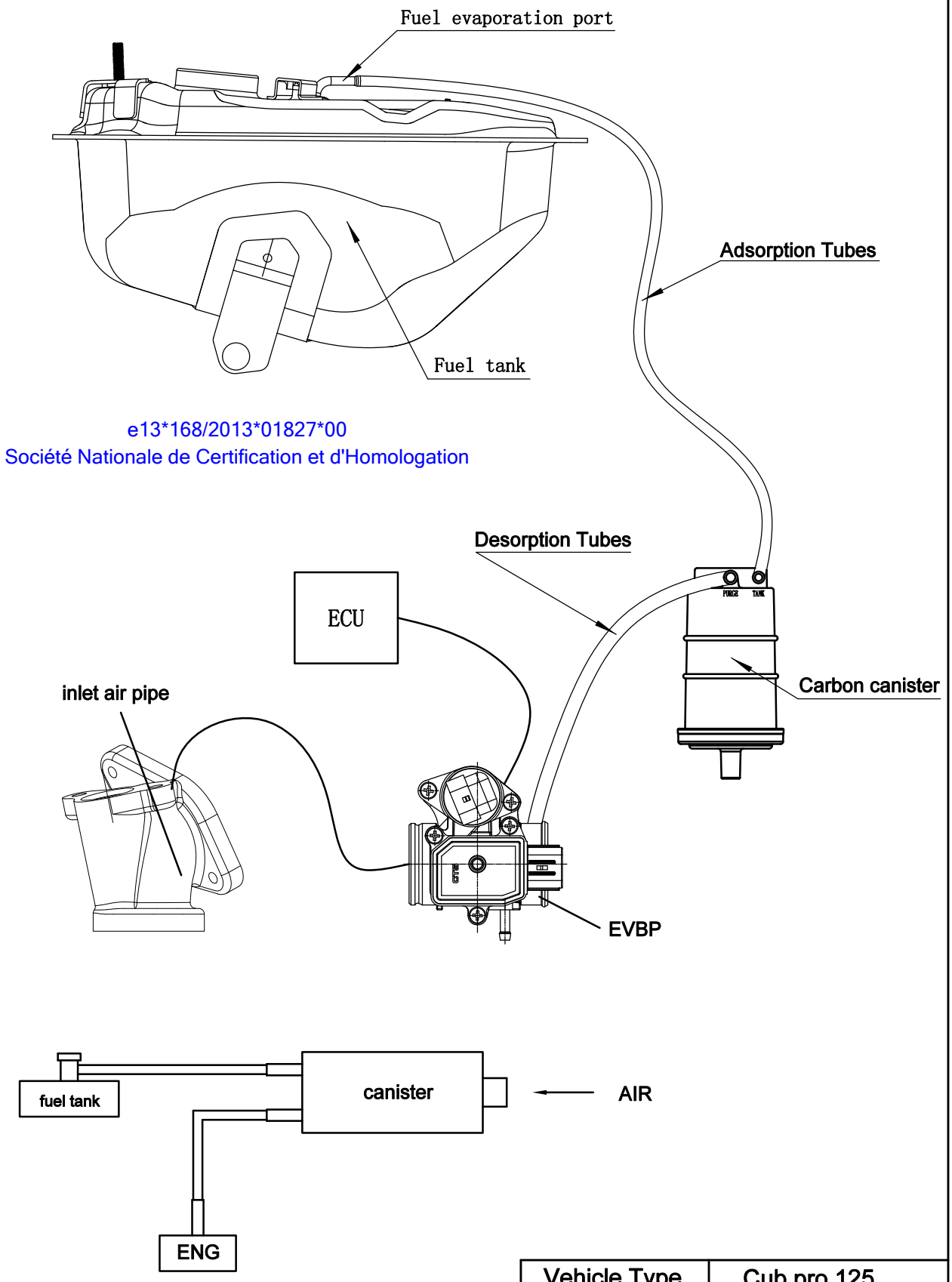

Vehicle Type	Cub pro 125
Evaporative Control System	
Drawing No	Cub pro 125-56

Kamax Group Limited

Information document:168/2013-Cub pro 125-00
Application date:February 20,2023

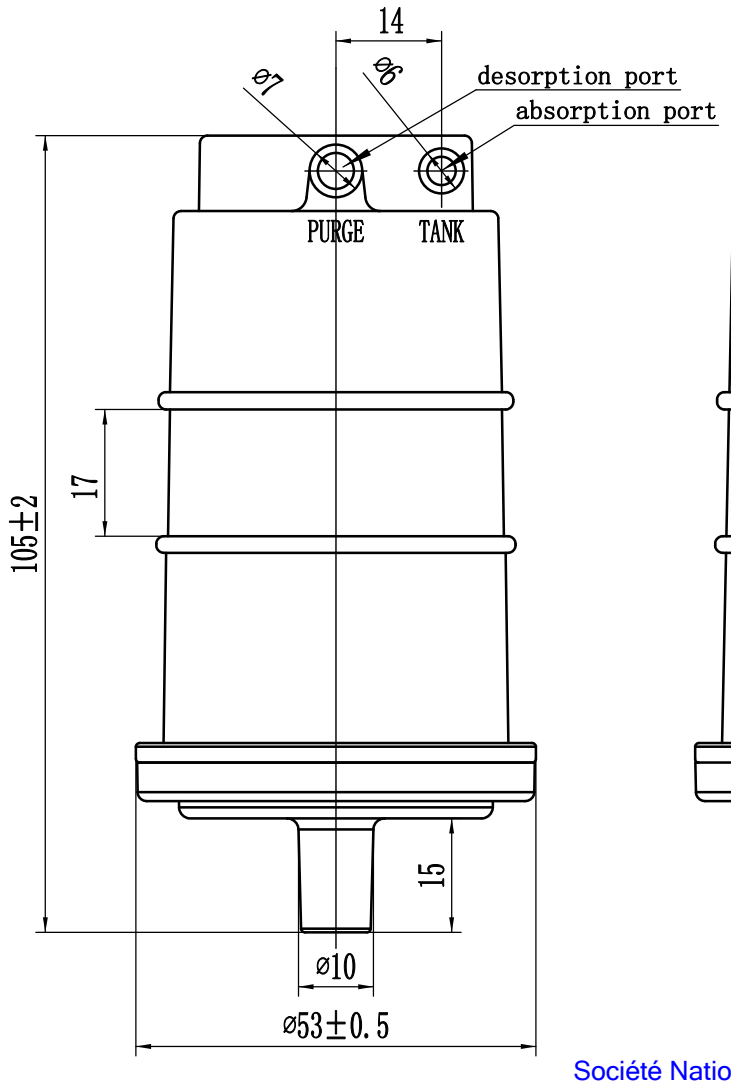

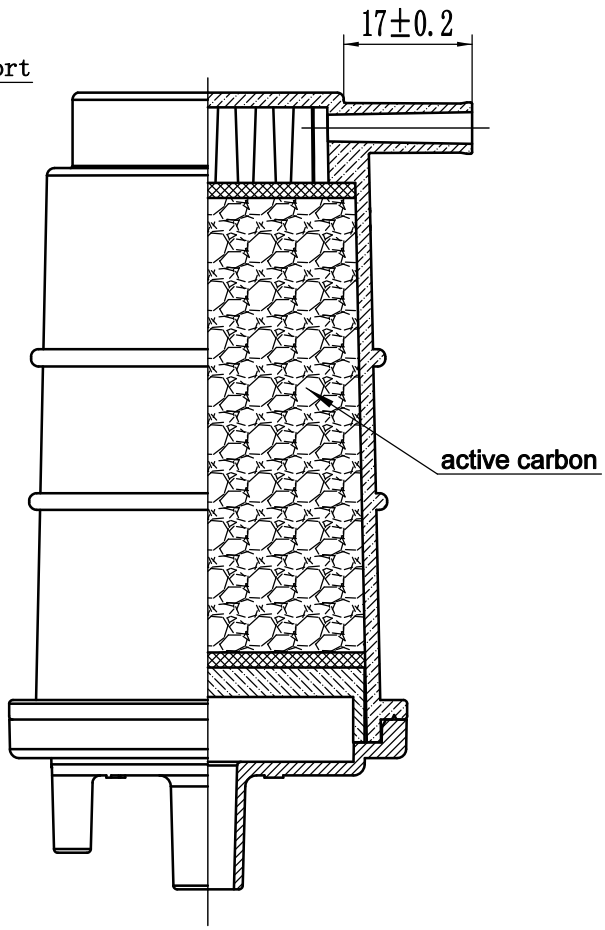

e13*168/2013*01827*00
Société Nationale de Certification et d'Homologation

make:GSGY
type:GSGY-120

Canister capacity	120ml
Charcoal powder capacity	80ml
Charcoal powder weight	28g
Adsorption material	active carbon
Housing material	NBR+PVC

Vehicle Type	Cub pro 125
Carbon canister	
Drawing No	Cub pro 125-57

e13*168/2013*01827*00
Société Nationale de Certification et d'Homologation

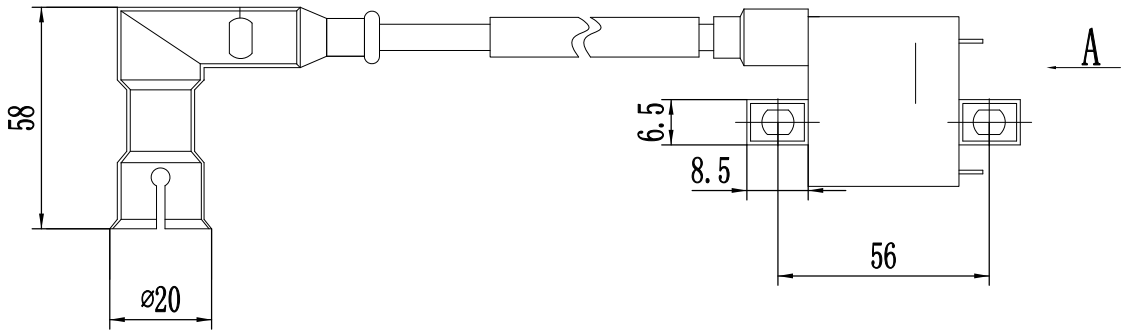

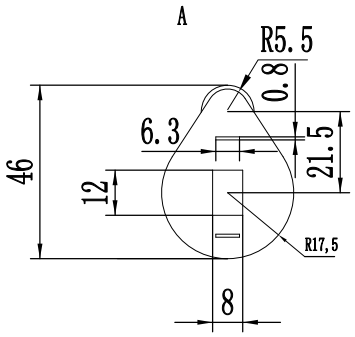

Vehicle Type	Cub pro 125
Ignition Coil(s)	
Drawing No	Cub pro 125-58

e13*168/2013*01827*00
Société Nationale de Certification et d'Homologation

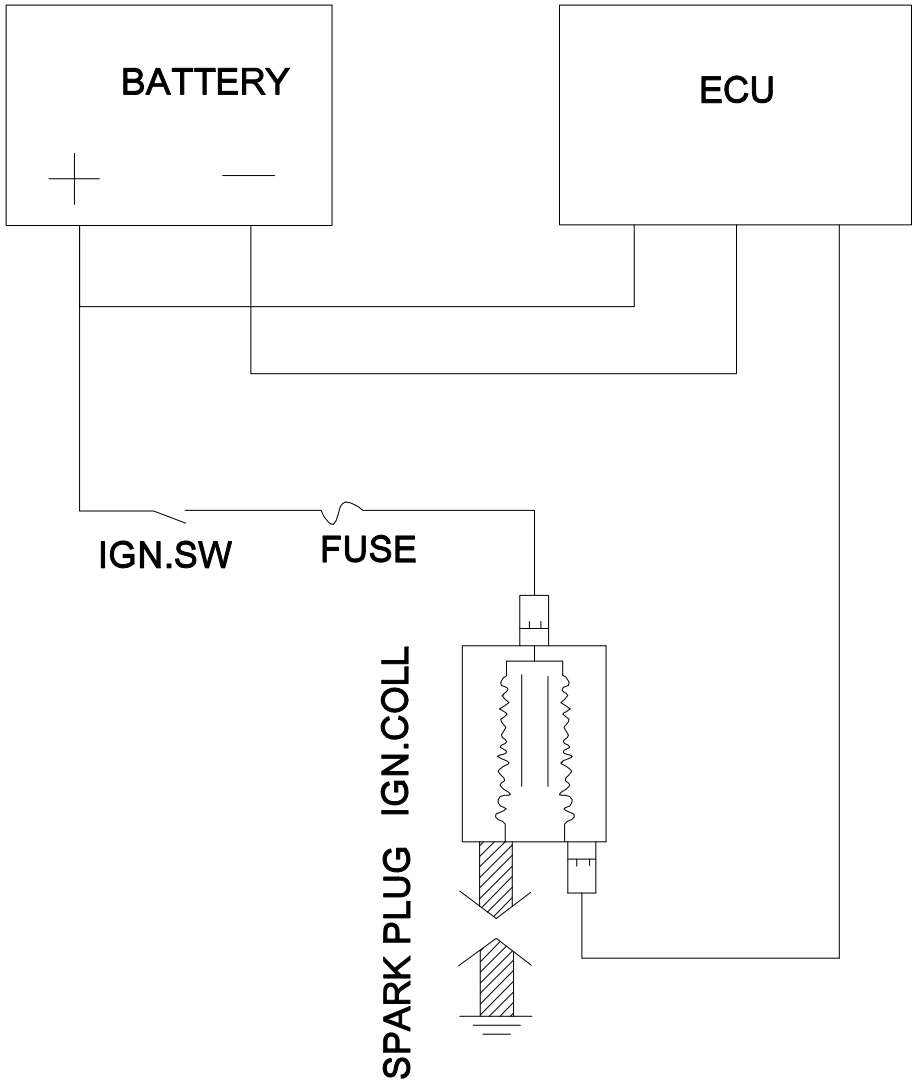

Vehicle Type	Cub pro 125
Wiring Diagram	
Drawing No	Cub pro 125-59

e13*168/2013*01827*00
Société Nationale de Certification et d'Homologation

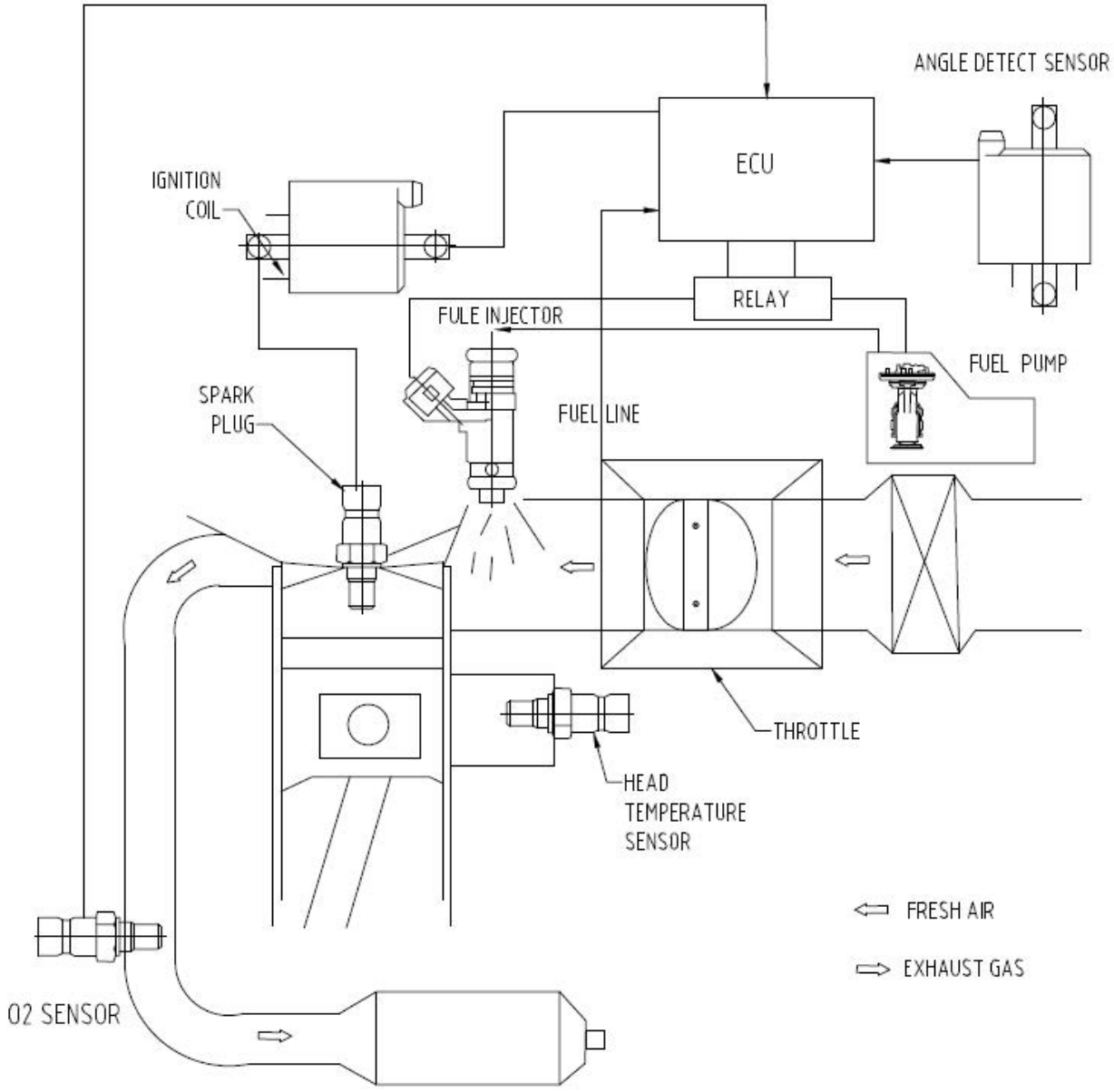

Vehicle Type	Cub pro 125
Autocontrol Fuel Injection System	
Drawing No	Cub pro 125-60

e13*168/2013*01827*00

Société Nationale de Certification et d'Homologation

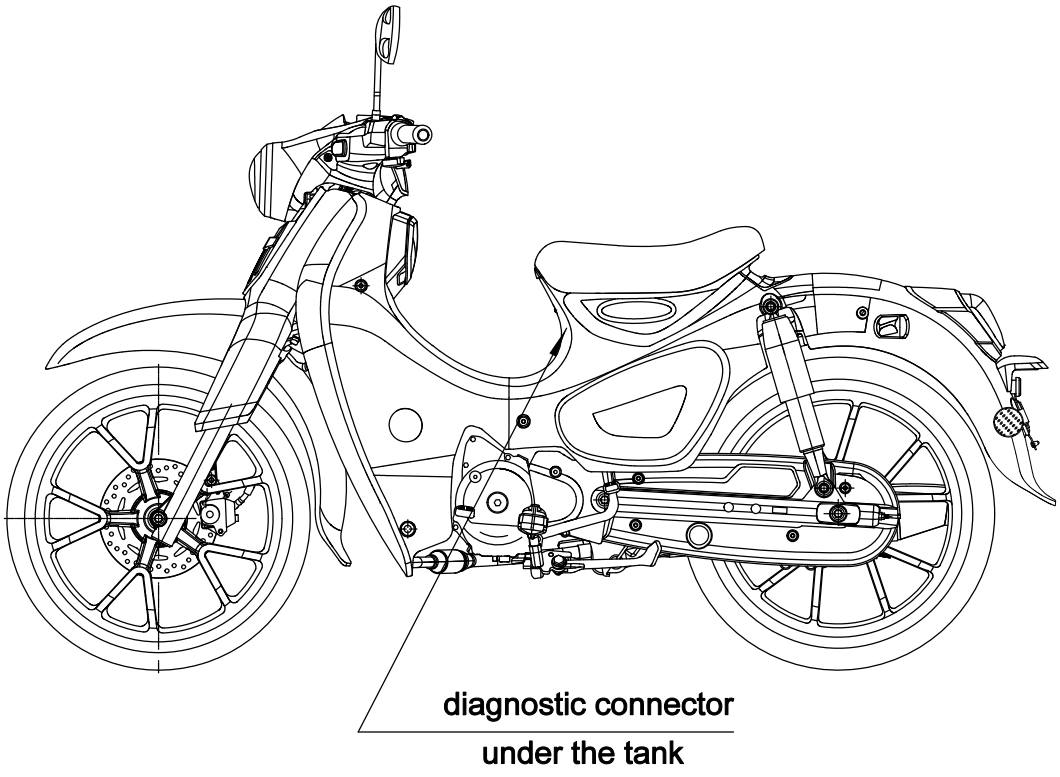

NO.	color	function
1	brown green	CAN Low
2	green	GND
3	white	CAN Hight
4	red and white	BATT
5	/	/
6	/	/

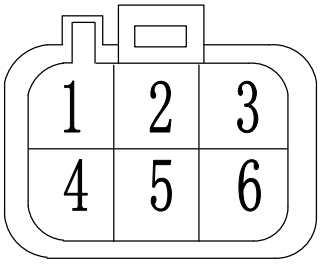

Vehicle Type	Cub pro 125
Location of diagnostic connector	
Drawing No	Cub pro 125-61

Kamax Group Limited

Information document:168/2013-Cub pro 125-00
Application date:February 20,2023

e13*168/2013*01827*00
Société Nationale de Certification et d'Homologation

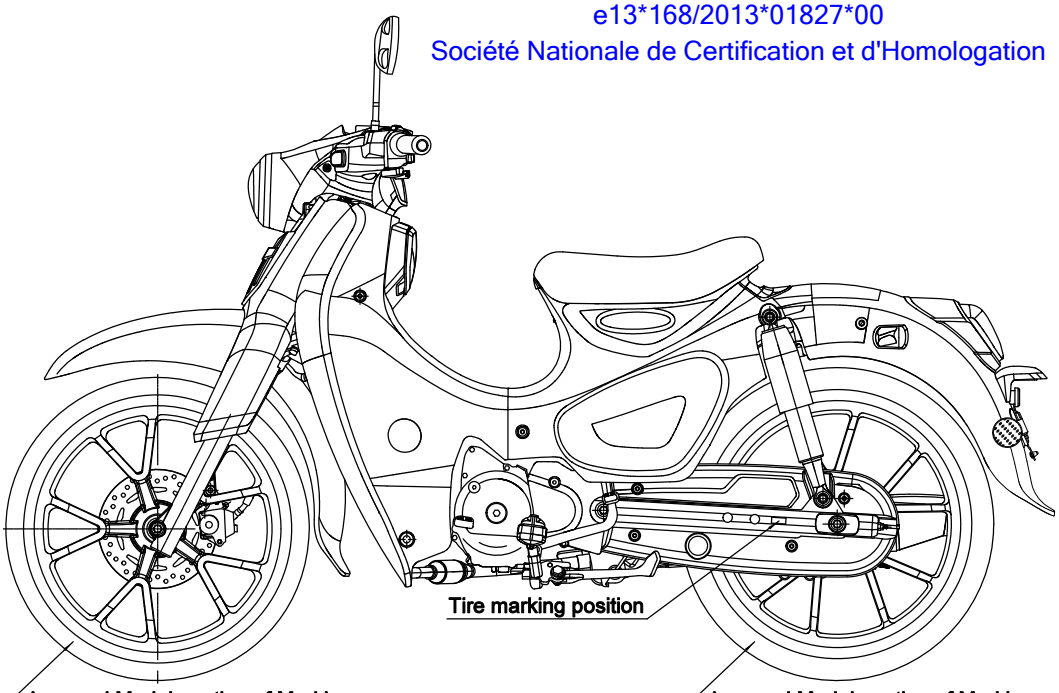

Approval Mark Location of Marking

(optional 1) Marking: E4 75R-0006489
(optional 2) Marking: E4 75R-0010425
(optional 3) Marking: E4 75R-0014574
(optional 4) Marking: E4 75R-0006550
(optional 5) Marking: E4 75R-0012283
(optional 6) Marking: E4 75R-0013567

Approval Mark Location of Marking

(optional 1) Marking: E4 75R-0008070
(optional 2) Marking: E4 75R-0009994
(optional 3) Marking: E4 75R-0017939
(optional 4) Marking: E4 75R-0006551
(optional 5) Marking: E4 75R-0010425
(optional 6) Marking: E4 75R-0014574

Tire sticker

(optional 1 or 2 or 3)

TIRE INFORMATION

COLD TIRE PRESSURES: FRONT 230kpa (2.30kgf/cm^2)
[DRIVER AND PASSENGER] REAR 250kpa (2.50kgf/cm^2)
[DRIVER ONLY] FRONT 230kpa (2.30kgf/cm^2)
REAR 250kpa (2.50kgf/cm^2)
TIRE SIZE: FRONT 80/90-17 M/C REAR 90/90-17 M/C

Tire sticker

(optional 4 or 5 or 6)

TIRE INFORMATION

COLD TIRE PRESSURES: FRONT 230kpa (2.30kgf/cm^2)
[DRIVER AND PASSENGER] REAR 250kpa (2.50kgf/cm^2)
[DRIVER ONLY] FRONT 230kpa (2.30kgf/cm^2)
REAR 250kpa (2.50kgf/cm^2)
TIRE SIZE: FRONT 70/90-17 M/C REAR 80/90-17 M/C

Vehicle Type	Cub pro 125
Tire Information	
Drawing No	Cub pro 125-62

e13*168/2013*01827*00
Société Nationale de Certification et d'Homologation

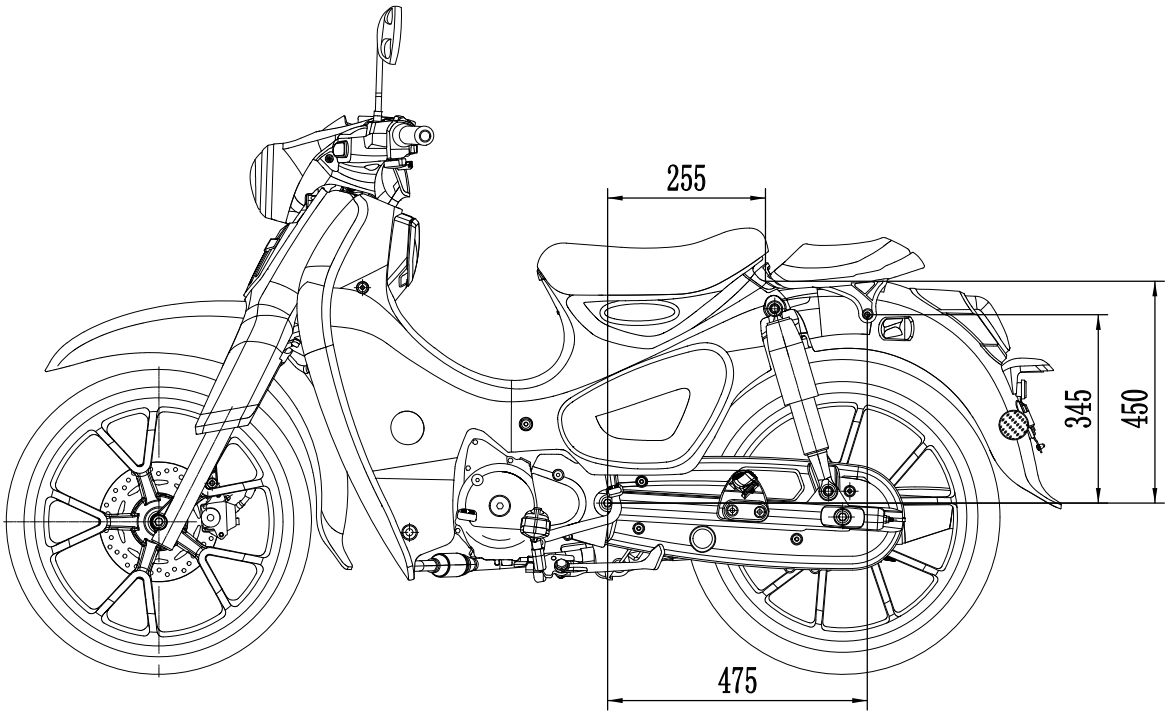

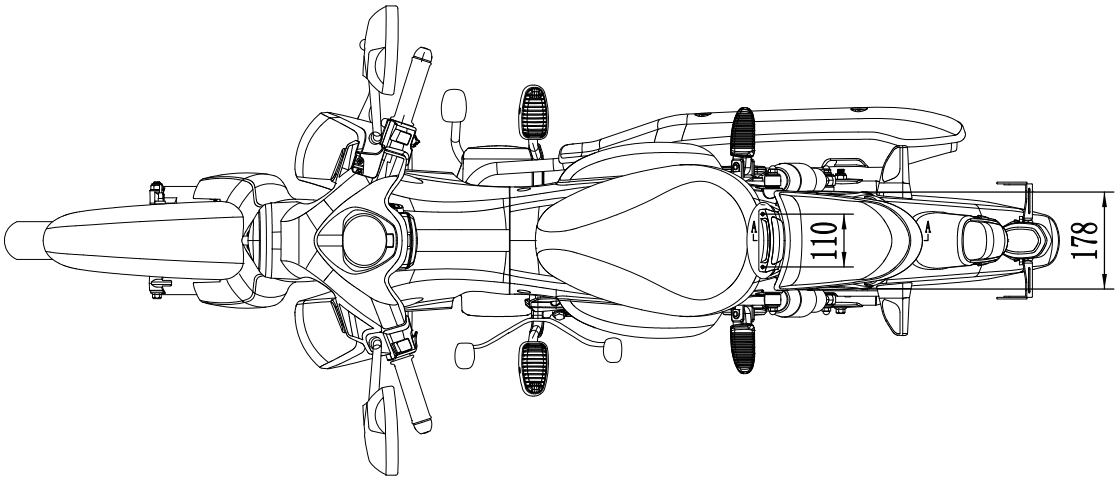

A-A
1:2

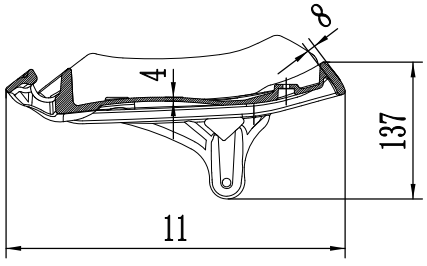

Vehicle Type	Cub pro 125
Hand-Hold(Version2)	
Drawing No	Cub pro 125-63

Kamax Group Limited

Information document:168/2013-Cub pro 125-00
Application date:February 20,2023

	Front	Rear
optional 1 1.85×17 Front 2.15×17 Rear		
optional 2 1.85×17 Front 2.15×17 Rear	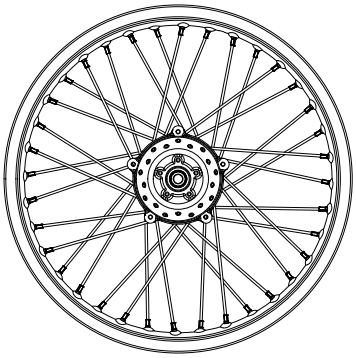	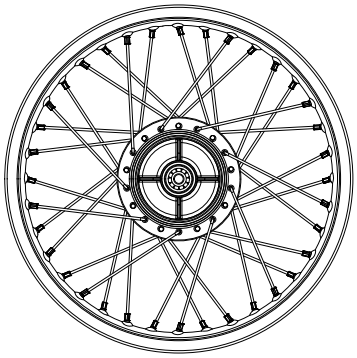
optional 3 1.4×17 Front 1.6×17 Rear	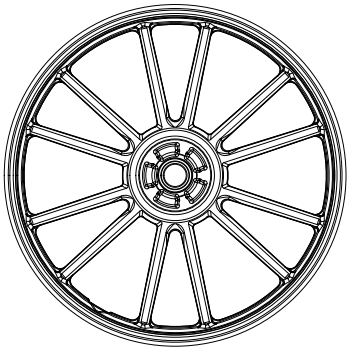	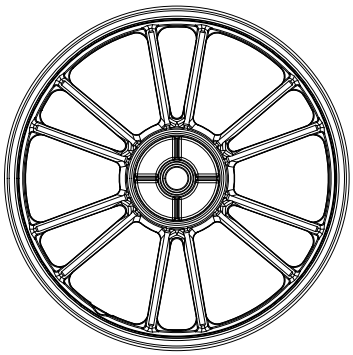
optional 4 1.4×17 Front 1.6×17 Rear	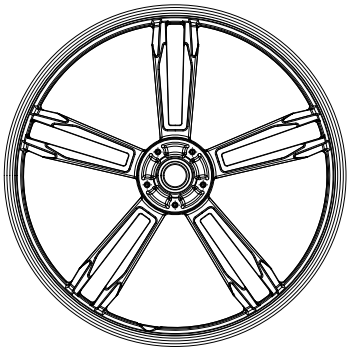	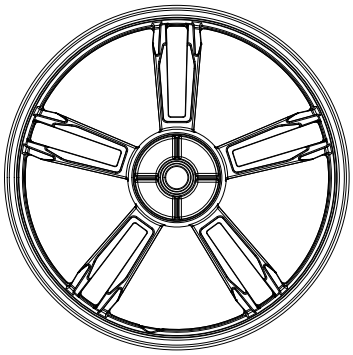

e13*168/2013*01827*00
Société Nationale de Certification et d'Homologation

Vehicle Type	Cub pro 125
Rim model	
Drawing No	Cub pro 125-64

Table 7.6.2.2.
List and purpose of all components monitored by the OBD system

Device circuits	Circuit continuity			Circuit rationality		
	Short circuit to battery	Short circuit to ground	Open circuit	Out of range	Performance/ Plausibility	Signal stuck
Control module (ECU/PCU) internal error	X	X	X	X	X	X
Engine speed Sensor	X	X	√	X	X	X
Engine Coolant Temperature Sensor	√	√	√	√	X	√
Intake Air Temperature Sensor	√	√	√	√	X	√
Manifold absolute Pressure Sensor	√	√	√	√	√	√
Oxygen Sensor	√	√	√	√	√	√
Throttle Position Sensor	√	√	√	X	X	X
Evaporative Emission System	√	√	√	√	X	√
Fuel Injector	√	√	√	X	X	X
Idle Air Control System *	√	√	√	X	√	X
Ignition Coil “A” Primary Control	X	√	X	X	X	X
Oxygen Sensor Heater	√	√	√	X	√	X
Fuel Pump	√	√	√	X	X	X
Dump sensor	√	√	√	X	X	X
Mill	√	√	√	X	X	X
System voltage (onboard)	X	X	X	√	√	X
Vehicle speed	X	X	√	X	X	X

√: Yes

X: No

Remark:* For Idle Air Control System, Derogation allowed if manufacturer requests, level 3

instead,actuator signal present only without indication of symptom.

Table 7.6.2.4.

Written description (general working principles) for all OBD stage I diagnostic triggering any operating mode which significantly reduces engine torque in case of fault detection:

Component / system	Malfunction Criteria	Fault code	Malfunction type
Fuel injector 1	short to battery	P0262	Unable to complete fuel injection, engine power loss
	open circuit	P0201	
	short to ground	P0261	fuel injection in long term then cylinder flooded, engine misfire, power loss;
Ignition Coil 1	short to ground	P2300	Loss of ignition, loss of engine power
Fuel pump	short to battery	P0629	Fuel supply failure, power loss; engine stalled
	open circuit	P0627	
	short to ground	P0628	
Fuel system	System Too Lean	P2177	The fuel supply is increased and torque may fluctuation
	System Too Rich	P2178	The fuel supply is reduced and the torque is reduced
Manifold absolute pressure sensor	signal check: no pressure drop after start	P0105	The system switches the control mode; torque fluctuation
	Manifold Abs.Pressure or Bar.Pressure High Input	P0108	
	Manifold Abs.Pressure or Bar.Pressure Low Input	P0107	
	Manifold Abs.Pressure or Bar.Pressure Range/Performance	P0106	
O2 Sensor	O2 Sensor Circuit Low Voltage	P0131	Abnormal closed-loop correction, torque decrease; exit closed-loop, power fluctuation
	O2 Sensor Circuit High Voltage	P0132	Abnormal closed-loop correction, torque fluctuation; exit closed-loop, power fluctuation
	O2 Sensor Circ., Bank1-Sensor1 Malfunction	P0130	exit closed-loop, torque fluctuation
	O2 Sensor Circ., Bank1-Sensor1 Slow Response	P0133	exit closed-loop; torque fluctuation
Throttle position sensor	Throttle/Pedal Pos. Sensor Circ. Low Input	P0122	The system switches the control mode and the power drops
	Throttle/Pedal Pos. Sensor Circ. High Input	P0123	
Engine speed sensor	Eng.Speed Inp.Circ. No Signal	P0322	Loss of synchronization, loss of power
Idle air control system	Idle air control system Fault	P0511	Idle torque fluctuates and may even stall

OBD Service $01

Request current powertrain diagnostic data	SID 0x01				
PID Description	PID	Bytes	Rang,Scaling	Service x01	Sevice x02
Request supported PIDs from PID 0x01-0x20	PID $00	4		√	√
	ByteA				
	ByteB				
	ByteC				
	ByteD				
01 Monitor status since DTCs cleared	PID$01	4		√	×
	ByteA				
	ByteB				
	ByteC				
	ByteD				
DTC that caused required freeze frame data storage	PID $02	2	0000~FFFF	×	√
Fuel system status	PID $03	ByteA	Bit coding	√	√
		ByteB	Bit coding		
Calculated Load Value	PID $04	1	0~100%,100/255%	√	√
Engine Coolant Temperature	PID $05	1	-40~215℃, 1℃	√	√
Short Term Fuel Trim Bank1	PID $06	1	-100%~99.22%, 100/128%	√	√
Long term Fuel Trim-bank1	PID $07	1	-100%~99.22%, 100/128%	√	√
Intake Manifold Absolute Pressure	PID $0B	1	0~255kpa, 1kpa	√	√
Engine RPM	PID $0C	2	0~16383.75/min, 0.25/min	√	√
Vehicle speed sensor	PID $0D	1	0.0...511.9922	√	√
Ignition Timing Advance for #1 Cylinder	PID $0E	1	-64~63.5°, 0.5°	√	√
Intake Air Temperature	PID $0F	1	-40~215℃, 1℃	√	√
Absolute Throttle Position	PID $11	1	0%~100%, 100/255%	√	√
Location of Oxygen sensor	PID $13	1	Bit coding	√	×
Oxygen Sensor Output Voltage Bank1 sensor1	PID $14	2	0~1.275, 0.005V	√	×
Short term fuel trim Bank 1 Sensor 1		1	-100%~99.22%, 100/128%	√	√
OBD requirements to which vehicle or engine is certified.	PID $1C	1	Bit coding	√	×
Time Since Engine Start	PID $1F	2	65.535sec,1sec	√	√
Distance traveled while MIL is activated	PID $21	1		√	×
Absolute load value	PID $43	1	0~100%,100/255%	√	√
Relative throttle position	PID $45	1	0%~100%, 100/255%	√	√

OBD Service $02

Outputs	Decription
PID $02	Pcode of the fault which freeze frame
PID $03	Fuel system bank1/bank2 status
PID $04	Calculated load value
PID $05	Engine coolant temperature
PID $06	Short term fuel trim - Bank 1
PID $07	Long term fuel trim - Bank 1
PID $0B	Intake manifold absolute pressure
PID $0C	Engine speed
PID $0D	Vehicle speed
PID $0E	Ignition angle
PID $0F	Intake air temperature
PID $11	Absolute throat position
PID $43	Absolute load value
PID $1F	Engine run time

e13*168/2013*01827*00
Société Nationale de Certification et d'Homologation

	FUNCTION	Fault type	Fault code	Fault Class	CARB description	Monitor Strategy Description	Malfunction Criteria	MIL activation	Demonstration test
Fuel injector	EV1	max	P0262	4	ISO15031	Circuit check	Cylinder 1 Injector Circuit High	5 sec. after Fault	idle
		min	P0261				Cylinder 1 Injector Circuit Low		
		sig	P0201				Injector Circuit/Open – Cylinder 1		
Fuel pump	KPE	max	P0629	4	ISO15031	Circuit check	Fuel Pump “A” Control Circuit High	5 sec. after Fault	idle
		min	P0628				Fuel Pump “A” Control Circuit Low		
		sig	P0627				Fuel Pump “A” Control Circuit/Open		
Engine cooling fan	LUES1E	max	P0692	4	ISO15031	Circuit check	Fan 1 Control Circuit High	5 sec. after Fault	idle
		min	P0691				Fan 1 Control Circuit Low		
		sig	P0480				Fan 1 Control Circuit		
Idle air control system	STEP	max	P0509	4	ISO15031	Circuit check	Idle Air Control System Circuit High	5 sec. after Fault	idle
		min	P0508				Idle Air Control System Circuit Low		
		sig	P0511				Idle Air Control Circuit		
		Npl	P0511				Idle Air Control Over current		
canister purge valve	TEVE	max	P0459	4	ISO15031	Circuit check	Evaporative Emission System Purge Control Valve Circuit High	5 sec. after Fault	idle
		min	P0458				Evaporative Emission System Purge Control Valve Circuit Low		
		sig	P0444				Evaporative Emission System Purge Control Valve Circuit Open		
secondary air valve	DLSVE	max	P0412	4	ISO15031	Circuit check	Secondary Air Injection System Switching Valve “A”	5 sec. after Fault	
		min	P0414				Secondary Air Injection System Switching Valve “A” Circuit Shorted		
		sig	P0413				Secondary Air Injection System Switching Valve “A” Circuit Open		
Ignition Coil	IG1	min	P2300	4	ISO15031	Circuit check	Ignition Coil Primary Control Circuit Low	5 sec. after Fault	idle
MIL	MILE	max	P0650	5	ISO15031	Circuit check	short to battery plus	off	idle
		min					short to ground		
		sig					open circuit		
Manifold absolute pressure sensor	LM	max	P0108	4	ISO15031	Circuit check, max limit exceeds	Manifold Absolute Pressure/Barometric Pressure Circuit High	5 sec. after Fault	idle
		min	P0107	4		Circuit check, min limit exceeds	Manifold Absolute Pressure/Barometric Pressure Circuit Low	5 sec. after Fault	
		si	P0105	3		signal check: no pressure drop after start	Manifold Absolute Pressure/Barometric Pressure Circuit	3 driving cycles	
		npl	P0106	3		signal non_plausible	Manifold Absolute Pressure/Barometric Pressure Circuit Range/Performance	3 driving cycles	

Engine speed sensor	N	sig	P0322	3	ISO15031	Synchronisation didn't take place by some certain phase sensor signals has been	Ignition/Distributor Engine Speed Input Circuit No Signal	3 driving cycles	idle
Idle speed control	LLR	max	P0507	3	ISO15031	actuator blocked at higher position	Idle Air Control System RPM Higher Than Expected	3 driving cycles	idle
		min	P0506			actuator blocked at lower position	Idle Air Control System RPM Lower Than Expected		
Engine temperature	TM	max	P0118	4	ISO15031	Circuit check	Engine Coolant Temperature Sensor 1 Circuit High	5 sec. after Fault	idle
		min	P0117			Circuit check	Engine Coolant Temperature Sensor 1 Circuit Low		
		sig	P0116			EngDsTPhysRngLo/EngDsTPhysRngHi	Engine Coolant Temperature Sensor 1 Circuit Range/Performance		
		npl	P0126	3		engine temperature is stuck	Insufficient Coolant Temperature for Stable Operation	3 driving cycles	idle
Intake manifold temperature sensor	TA	max	P0113	4	ISO15031	DFC_IntkAirTAirFltDsSRCMax	Intake Air Temperature Sensor 1 Circuit High	5 sec. after Fault	idle
		min	P0112			DFC_IntkAirTAirFltDsSRCMin	Intake Air Temperature Sensor 1 Circuit Low		
		npl	P0114	3		DFC_IntkAirTAirFltDsSTC	Intake Air Temperature Sensor 1 Circuit Intermittent	3 driving cycles	
System voltage (onboard)	UB	max	P0563	5	ISO15031	rationality check max limit exceeds	System Voltage High	off	
		min	P0562			rationality check min limit exceeds	System Voltage Low		
		npl	P0560			implausibility check	System Voltage		
Vehicle speed	VFZ	Sig	P0501	4	ISO15031	lower limit exceeded during fuel cut off	Vehicle Speed Sensor Range/Performance	5 sec. after Fault	driving cycle
Throttle position sensor	DK	max	P0123	4	ISO15031	Circuit check, max limit exceeds	Throttle/Pedal Position Sensor/Switch Circuit High	5 sec. after Fault	
		min	P0122			Circuit check, min limit exceeds	Throttle/Pedal Position Sensor/Switch Circuit Low	5 sec. after Fault	

Fuel system	DKVS	max	P2177	11	ISO15031	fuel trim high limits exceded out of idle	multiplicative adaption value reach upper limit	3 driving cycles	driving cycle
		min	P2178			fuel trim low limits exceded out of idle	multiplicative adaption value reach lower limit		
		max	P2187			fuel trim high limits exceded at idle	additive adaption value reach upper limit		
		min	P2188			fuel trim high limits exceded at idle	additive adaption value reach lower limit		

Misfire cyl. 0	MD00	max	P0301	2	ISO15031	misfire rate that harmful to catlyst (mx fault)	misfire rate that harmful to catlyst (mx fault)	MIL-blinking at present driving cycle & MIL-blinking off after ti-cutoff	driving cycle
Misfire cyl. 0		min	P0301			misfire rate that deteriorate emission (mn fault)	fault counter of emission relevant misfiring of all cylinders	3 driving cycles	driving cycle
Misfire cyl. 0		npl	P0301			implausible fault	fault counter of emission relevant misfiring of all cylinders at the first interval after start.	3 driving cycles	driving cycle
O2 sensor heater	HSVE	max	P0032	4	ISO15031	Circuit check	HO2S Heater Control Circuit High	5 sec. after Fault	idle
		min	P0031			Circuit check	HO2S Heater Control Circuit Low		idle
		npl	P0030			Circuit check	HO2S Heater Control Circuit		idle
	HSV	npl	P0053	3	ISO15031	current sensor resistance is greater than threshold value	HO2S Heater Resistance	3 driving cycles	driving cycle
O2 sensor (slow response) Bank1	LATP	max	P0133	3	ISO15031	filtered cycle delay time of sensor signal upstream cat.is greater than threshold value	O2 Sensor Circuit Slow Response	3 driving cycles	driving cycle
O2 sensor signal check(bank1)	DLSV	max	P0132	4	ISO15031	O2 Sensor Circuit High Voltage	O2 Sensor Circuit High Voltage	5 sec. after Fault	idle
		min	P0131			O2 Sensor Circuit Low Voltage	O2 Sensor Circuit Low Voltage		
		sig	P0134			O2 Sensor Circuit No Activity Detected	O2 Sensor Circuit No Activity Detected		
		npl	P0130			O2 Sensor Voltage has a restricted amplitude Signal	O2 Sensor Circuit		
						Sensor Voltage current has leakage to UB			
						O2 Sensor Voltage coupled with heater line			

OBD Service $06

Test ID	Comp ID	Test value	Min value	Max value	Description
1			548.5 mV	548.5 mV	Rich to lean sensor threshold voltage
2			548.5 mV	548.5 mV	Lean to rich sensor threshold voltage
7	0A		0.0mV	7999.9mV	Minimum sensor voltage for test cycle
8	0A		0.0mV	1900.4mV	Maximum sensor voltage for test cycle
9	10		0ms	400ms	Max. period duration bank1
0A	10		0ms	800ms	Min. period duration bank1
41	14		0 ohm	11702 ohm	Resistance of ceramic bank1
0B	24		0 counts	65535 counts	Mis-Fire Cylinder 1 Data
0C	24		0 counts	65535 counts	Mis-Fire Cylinder 1 Data

OBD Service $09

VID 04		CALID	Calibration Identifications
VID 06		CVN	Calibration Verification Numbers
VID 08	In use performance tracking	IPT	
	OBDCON	0	General denominator
	IGNCNTR	0	ignition counter
	CATCOMP1	0	numerator, catalyst monitor completion counts bank1
	CATCOND1	0	denominator, catalyst monitor completion counts bank1
		7.995	calculated ratio
	CATCOMP2	0	numerator, catalyst monitor completion counts bank2
	CATCOND2	0	denominator, catalyst monitor completion counts bank2
		7.995	calculated ratio
	O2SCOMP1	0	numerator, O2 sensor monitor completion counts bank1
	O2SCOND1	0	denominator, O2 sensor monitor completion counts bank1
		7.995	calculated ratio
	O2SCOMP2	0	numerator, O2 sensor monitor completion counts bank2
	O2SCOND2	0	denominator, O2 sensor monitor completion counts bank2
		7.995	calculated ratio
	EGRCOMP	0	numerator, EGR/VVT monitor completion counts
	EGRCOND	0	denominator, EGR/VVT monitor completion counts
		7.995	calculated ratio
	AIRCOMP	0	numerator, secondary air monitor completion counts
	AIRCOND	0	denominator, secondary air monitor completion counts
		7.995	calculated ratio
	EVAPCOMP	0	numerator, EVAP monitor completion counts
	EVAPCOND	0	denominator, EVAP monitor completion counts
		7.995	calculated ratio
	SO2SCOMP1	0	numerator, Secondary O2 sensor monitor completion counts bank1
	SO2SCOND1	0	denominator, Secondary O2 sensor monitor completion counts bank1
		7.995	calculated ratio
	SO2SCOMP2	0	numerator, Secondary O2 sensor monitor completion counts bank2
	SO2SCOND2	0	denominator, Secondary O2 sensor monitor completion counts bank2
		7.995	calculated ratio

Kamax Group Limited
Unit 917A 9/F Tower A New Mandarin Plaza No 14 Science Museum Road Tsimshatsui Kowloon, Hong Kong

Information

On the type-approval procedure chosen in accordance with Article 25(1) of Regulation (EU) No 168/2013

Information folder sheet

A duly completed version of this statement shall be included in the information folder.
The undersigned: [Mr. Wenbo HU/ Chairman]

Company name and address of the manufacturer:

Kamax Group Limited

Unit 917A 9/F Tower A New Mandarin Plaza No 14 Science Museum Road

Tsimshatsui Kowloon, Hong Kong

Name and address of the manufacturer's representative (if any)

Kamax Europe Gmbh

Talhof 1,88709 Hagnau am Bodensee, Germany

Hereby applies for type-approval procedure :

~~(a) step-by-step type-approval~~

(b) single-step type-approval

~~(c) mixed type-approval~~

e13*168/2013*01827*00
Société Nationale de Certification et d'Homologation

Where procedures (a) or (c) are chosen, compliance with requirements as under (b) is declared for all systems, components and separate technical units.

Multi-stage type-approval chosen in accordance with Article 25(5) of Regulation (EU) No 168/2013: ~~yes~~/no

Information on the vehicle(s) to be filled in, if application is for EU whole-vehicle type- approval:

0.1. Make (trade name of the manufacturer): KAMAX

0.2. Type: Cub pro 125

0.2.1. Variant(s): 0

0.2.2. Version(s): 1, 2

0.2.3. Commercial name(s) (if available): SUPER CUB, SUPER CUB 125, T125, C125, DM125, CUB PRO, CUB PRO 125

0.3. Category, subcategory and sub-subcategory of vehicle: L3e-A1

Kamax Group Limited
Unit 917A 9/F Tower A New Mandarin Plaza No 14 Science Museum Road Tsimshatsui Kowloon, Hong Kong

Information to be filled in, if application is for type-approval of a system/ component/ separate technical unit:

0.7. Make(s) (trade name(s) of manufacturer): N/A

0.8. Type: N/A

e13*168/2013*01827*00
Société Nationale de Certification et d'Homologation

0.8.1. Commercial name(s) (if available): N/A

1.6. Virtual and/or self-testing: N/A

1.6.1. Overview list with virtual and/or self-tested systems, components or separate technical units pursuant to point 6 of Annex III to Commission Delegated Regulation (EU) No 44/2014 below:

Overview table virtual and/or self-testing

Delegated act	Annex	Subject	Virtual and/or self-tested: yes/no
Commission Delegated Regulation (EU) No 134/2014 (*)	X	Testing procedures on maximum design vehicle speed	Self-testing: ~~yes/~~no
Commission Delegated Regulation (EU) No 3/2014	II	Audible warning devices	Self-testing: ~~yes/~~no
Commission Delegated Regulation (EU) No 3/2014	VIII	Driver-operated controls including identification of controls, tell-tales and indicators	Self-testing: ~~yes/~~no
Commission Delegated Regulation (EU) No 3/2014	IX	Installation of lighting and light- signalling devices	Virtual testing: ~~yes/~~ no
Commission Delegated Regulation (EU) No 3/2014	X	Rearward visibility	Virtual testing: ~~yes/~~ no
Commission Delegated Regulation (EU) No 3/2014	XV	Installation of tyres	Virtual testing: ~~yes/~~ no
Commission Delegated Regulation (EU) No 44/2014	XIV	Registration plate space	Self & Virtual testing: ~~yes/~~no
Commission Delegated Regulation (EU) No 44/2014	XVI	Stands	Self-testing: ~~yes/~~no
This Commission Implementing Regulation(EU) No 901/2014	V	Statutory plate and EU type-approval mark	Self-testing: ~~yes/~~no

(*) Commission Delegated Regulation (EU) No 134/2014 of 16 December 2013 supplementing Regulation (EU) No 168/2013 of the European Parliament and of the Council with regard to environmental and propulsion unit performance requirements and amending Annex V.

1.6.2. Detailed report on validation of virtual and/or self-testing added: ~~yes~~/no

Place: Hong kong, China
Date: February 20, 2023
Signature:

Name and position in the company: Mr. Wenbo HU/ Chairman

Kamax Group Limited
Unit 917A 9/F Tower A New Mandarin Plaza No 14 Science Museum Road Tsimshatsui Kowloon, Hong Kong

Manufacturer's statement on endurance testing (Annex V to Commission Delegated Regulation (EU) No 3/2014)

A duly completed version of this statement shall be included in the information folder.

The undersigned: [Mr. Wenbo HU/ Chairman]

Company name and address of the manufacturer:

Kamax Group Limited
Unit 917A 9/F Tower A New Mandarin Plaza No 14 Science Museum Road
Tsimshatsui Kowloon, Hong Kong

Name and address of the manufacturer's representative (if any)

Kamax Europe Gmbh
Talhof 1,88709 Hagnau am Bodensee, Germany

Hereby states that the vehicles:

0.1. Make (trade name of the manufacturer): KAMAX

0.2. Type: Cub pro 125

e13*168/2013*01827*00
Société Nationale de Certification et d'Homologation

0.2.1. Variant(s): 0

0.2.2. Version(s): 1, 2

0.2.3. Commercial name(s) (if available): SUPER CUB, SUPER CUB 125, T125, C125, DM125, CUB PRO, CUB PRO 125

0.3. Category, subcategory and sub-subcategory of vehicle: L3e-A1

for which type-approval is sought shall withstand normal use as intended for at least 52500 km travelled within five years of first registration, taking into account regular and scheduled maintenance and specific equipment adjustments, as described clearly and unambiguously in the instructions manual delivered with the vehicles.

The undersigned furthermore confirms that the endurance of the systems, parts and equipment critical for functional safety is ensured through appropriate testing and the use of good engineering practice.

This declaration has no bearing on any vehicle warranty.

Place:	Hong kong, China	Date:	February 20, 2023
Signature:		Name and position in the company:	Mr. Wenbo HU/ Chairman

Kamax Group Limited
Unit 917A 9/F Tower A New Mandarin Plaza No 14 Science Museum Road Tsimshatsui Kowloon, Hong Kong

Manufacturer's statement on structure integrity (Annex XIX to Commission Delegated Regulation (EU) No 3/2014)

A duly completed version of this statement shall be included in the information folder.

The undersigned: [Mr. Wenbo HU/ Chairman]

Company name and address of the manufacturer:

e13*168/2013*01827*00
Société Nationale de Certification et d'Homologation

Kamax Group Limited
Unit 917A 9/F Tower A New Mandarin Plaza No 14 Science Museum Road
Tsimshatsui Kowloon, Hong Kong

Name and address of the manufacturer's representative (if any)

Kamax Europe Gmbh
Talhof 1,88709 Hagnau am Bodensee, Germany

Hereby states that the vehicles:

0.1. Make (trade name of the manufacturer): KAMAX

0.2. Type: Cub pro 125

0.2.1. Variant(s): 0

0.2.2. Version(s): 1, 2

0.2.3. Commercial name(s) (if available): SUPER CUB, SUPER CUB 125, T125, C125, DM125, CUB PRO, CUB PRO 125

0.3. Category, subcategory and sub-subcategory of vehicle: L3e-A1

Shall be constructed in a proper manner and are designed to be sufficiently robust to withstand the intended use over the vehicle's lifetime, taking into account regular and scheduled maintenance and specific equipment adjustments, as described clearly and unambiguously in the instructions manual delivered with the vehicles.

The undersigned furthermore agrees to and guarantees that specific analyses of vehicle structures, components and/or parts using engineering calculations, virtual testing methods and/or structural testing shall be made available in a timely manner to the approval authority and the European Commission upon request in case of a recall due to a serious safety risk.

This declaration applies to all vehicles covered by the type-approval to which this statement is annexed and has no bearing on any vehicle warranty.

Place:	Hong kong, China	Date:	February 20, 2023
Signature:	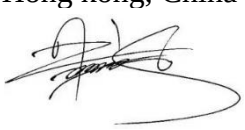	Name and position in the company:	Mr. Wenbo HU/ Chairman

Kamax Group Limited

Unit 917A 9/F Tower A New Mandarin Plaza No 14 Science Museum Road Tsimshatsui Kowloon, Hong Kong

Manufacturer's certificate on access to vehicle OBD (stage I) and vehicle repair and maintenance information

A duly completed version of this certificate shall be included in the information folder.

Reference number: 168/2013-Cub pro 125-00

e13*168/2013*01827*00

Société Nationale de Certification et d'Homologation

The undersigned: [Mr. Wenbo HU/ Chairman]

Company name and address of the manufacturer:

Kamax Group Limited

Unit 917A 9/F Tower A New Mandarin Plaza No 14 Science Museum Road

Tsimshatsui Kowloon, Hong Kong

Name and address of the manufacturer's representative (if any)

Kamax Europe Gmbh

Talhof 1,88709 Hagnau am Bodensee, Germany

Hereby certifies that:

It provides access to vehicle OBD and vehicle repair and maintenance information in compliance with

- Chapter XV of Regulation (EU) No 168/2013

with respect to the types of vehicle, engine and pollution-control device listed in Addendum 1 to this certificate.

~~The following derogation is applied: carry-over systems (1).~~

The principal website addresses, through which the relevant information may be accessed and which are hereby certified to be in compliance with the above provisions, are listed in Addendum 2 to this certificate along with the contact details of the manufacturer's representative listed in Addendum 3 to this certificate, whose signature is below.

Where applicable: The manufacturer hereby also certifies that it has complied with the obligation in Article 57(8) of Regulation (EU) No 168/2013 to provide the relevant information for previous approvals of these vehicle types no later than six months after the date of type-approval.

Place:	Hong kong, China	Date:	February 20, 2023
Signature:		Name and position in the company:	Mr. Wenbo HU/ Chairman

1: List of the types of vehicle, engine and pollution-control device

2: Web sites addresses

3: Contact details

Kamax Group Limited
Unit 917A 9/F Tower A New Mandarin Plaza No 14 Science Museum Road Tsimshatsui Kowloon, Hong Kong

e13*168/2013*01827*00
Société Nationale de Certification et d'Homologation

Addendum 1
to
Manufacturer's certificate with reference number 168/2013-Cub pro 125-00 **on access to vehicle OBD**
(stage I) and vehicle repair and maintenance information

List of the types of vehicle:

0.1. Make (trade name of the manufacturer): KAMAX

0.2. Type: Cub pro 125

0.2.1. Variant(s): 0

0.2.2. Version(s): 1, 2

0.2.3. Commercial name(s) (if available): SUPER CUB, SUPER CUB 125, T125, C125, DM125, CUB PRO, CUB PRO 125

0.3. Category, subcategory and sub-subcategory of vehicle: L3e-A1

1. Type-approval number including extension number (if available)：N/A

1.1. Type-approval issued on (date, if available)：N/A

List of the types of engines:

3. Combustion engine~~/ electric motor/hybrid~~ application code：153FMI

3.1. Type-approval number (if available)：N/A

3.2. Type-approval issued on (date, if available)：N/A

List of the types of pollution-control devices:

0.7. Make(s) (trade name(s) of manufacturer)：N/A

0.8. Type：N/A

0.8.1. Commercial name(s) (if available)：N/A

0.8.2. Type-approval number including extension number (if available)：N/A

0.8.3. Type-approval issued on (date, if available)：N/A

Kamax Group Limited
Unit 917A 9/F Tower A New Mandarin Plaza No 14 Science Museum Road Tsimshatsui Kowloon, Hong Kong

e13*168/2013*01827*00
Société Nationale de Certification et d'Homologation

Addendum 2
to
Manufacturer's certificate with reference number 168/2013-Cub pro 125-00 **on access to vehicle OBD**
(stage I) and vehicle repair and maintenance information

Web site addresses referred to in this certificate

https://www.kamaxcub.com/

Account：N/A
Password：N/A

Kamax Group Limited
Unit 917A 9/F Tower A New Mandarin Plaza No 14 Science Museum Road Tsimshatsui Kowloon, Hong Kong

Addendum 3
to
Manufacturer's certificate with reference number 168/2013-Cub pro 125-00 **on access to vehicle OBD**
(stage II) and vehicle repair and maintenance information

Contact details of the manufacturer's representative referred to in this certificate

Kamax Europe Gmbh
Talhof 1,88709 Hagnau am Bodensee, Germany

e13*168/2013*01827*00
Société Nationale de Certification et d'Homologation

Kamax Group Limited

Unit 917A 9/F Tower A New Mandarin Plaza No 14 Science Museum Road Tsimshatsui Kowloon, Hong Kong

Manufacturer's certificate on access to vehicle OBD (stage II) and vehicle repair and maintenance information

A duly completed version of this certificate shall be included in the information folder.

Reference number: 168/2013-Cub pro 125-00

The undersigned: [Mr. Wenbo HU/ Chairman]

Company name and address of the manufacturer:

Kamax Group Limited

Unit 917A 9/F Tower A New Mandarin Plaza No 14 Science Museum Road

Tsimshatsui Kowloon, Hong Kong

Name and address of the manufacturer's representative (if any)

Kamax Europe Gmbh

Talhof 1,88709 Hagnau am Bodensee, Germany

Hereby certifies that:

- The vehicle types listed in Addendum 1 to this certificate are in compliance with the provisions of Article 16 and point 4 of Appendix 1 to Annex XII to Commission Delegated Regulation (EU) No 44/2014 relating to the in-use performance of the OBD system under all reasonable foreseeable driving conditions.
- The plans describing the detailed technical criteria for incrementing the numerator and denominator of each monitor in Addendum 2 to this certificate are correct and complete for all types of vehicles to

e13*168/2013*01827*00

Société Nationale de Certification et d'Homologation

Which the certificate applies.

Place:	Hong kong, China	Date:	February 20, 2023
Signature:		Name and position in the company:	Mr. Wenbo HU/ Chairman

Addenda:

- List of vehicle types to which this certificates applies.
- Plan(s) describing the detailed technical criteria for incrementing the numerator and denominator of each monitor as well as plan(s) for disabling numerators, denominators and general denominator

Kamax Group Limited
Unit 917A 9/F Tower A New Mandarin Plaza No 14 Science Museum Road Tsimshatsui Kowloon, Hong Kong

Addendum 1
to
Manufacturer's certificate with reference number 168/2013-Cub pro 125-00 **on access to vehicle OBD**
(stage II) and vehicle repair and maintenance information

List of the types of vehicle:

0.2. Type: Cub pro 125

e13*168/2013*01827*00
Société Nationale de Certification et d'Homologation

0.2.1. Variant(s): 0

0.2.2. Version(s): 1, 2

0.2.3. Commercial name(s) (if available): SUPER CUB, SUPER CUB 125, T125, C125, DM125, CUB PRO, CUB PRO 125

0.3. Category, subcategory and sub-subcategory of vehicle: L3e-A1

1. Type-approval number including extension number (if available)：N/A

1.1. Type-approval issued on (date, if available)：N/A

Kamax Group Limited
Unit 917A 9/F Tower A New Mandarin Plaza No 14 Science Museum Road Tsimshatsui Kowloon, Hong Kong

e13*168/2013*01827*00
Société Nationale de Certification et d'Homologation

Addendum 2

to

Manufacturer's certificate with reference number 168/2013-Cub pro 125-00 **on access to vehicle OBD**

(stage II) and vehicle repair and maintenance information

Plan(s) describing the detailed technical criteria for incrementing the numerator and denominator of each monitor as well as plan(s) for disabling numerators, denominators and general denominator.

General denominator calculation

The general denominator counter is used to measure the number of times the motorcycle runs. In a single operating cycle, the counter will increase in 10s if and only if the following criteria are met:

1. The altitude is lower than 2440m (75.7kPa)
2. The ambient temperature is greater than or equal to -7°C
3. The cumulative engine start time is greater than or equal to 600s
4. The cumulative running time of the motorcycle at a speed of 25km/h or above is greater than or equal to 300s
5. The motorcycle runs continuously at idle speed (such as the driver releases the accelerator pedal and the vehicle speed is less than or equal to 1.6km/h) for a time greater than or equal to 30s.

Monitor individual numerator calculation

Molecular counter: A molecular counter for a specific monitoring is used to measure the number of times the monitoring is performed. In order to detect faults and notify the driver, the monitoring will only be performed when all the monitoring conditions specified by the manufacturer are met. Unless there are reasonable technical reasons, the molecular counter should not increase more than once per cycle.

Denominator counter: Displays the number of driving events and takes into account the specific conditions of specific monitoring. If certain conditions are met during the operating cycle, the denominator counter should be increased at least once during the operating cycle.

Ignition cycle counter: displays the number of ignition cycles experienced. In each operating cycle, the ignition cycle counter will not accumulate more than once.

For specific components or systems with multiple monitoring (such as the first group of oxygen sensors, there may be multiple monitoring of the sensor's response or other characteristics), the OBD system shall separately track each specific monitored numerator counter and denominator counter except for short circuit and open circuit monitoring and only report the corresponding numerator counter and denominator counter of the specific monitoring with the lowest digital ratio. For a specific component, if two or more specific monitors have the same ratio, the numerator counter and denominator counter corresponding to the specific monitor report the group with the highest denominator counter.

Kamax Group Limited
Unit 917A 9/F Tower A New Mandarin Plaza No 14 Science Museum Road Tsimshatsui Kowloon, Hong Kong

Manufacturer's declaration on powertrain tampering prevention measures (anti-tampering)

1. Vehicle manufacturer's declaration on powertrain tampering prevention measures (anti-tampering):

— not to market interchangeable components which could enable propulsion unit performance to exceed levels applicable to the relevant (sub) category;

— manufacturer-facilitated modifications shall not increase the propulsion unit performance of the vehicle;

— modifications and interchangeability of parts and components

Manufacturer's declaration not to market interchangeable components which could enable propulsion unit performance to exceed levels applicable to the relevant (sub) category

A duly-completed version of this statement shall be included in the information folder.

0.4. Company name and address of the manufacturer:

Kamax Group Limited
Unit 917A 9/F Tower A New Mandarin Plaza No 14 Science Museum Road
Tsimshatsui Kowloon, Hong Kong

0.4.2. Name and address of the manufacturer's representative (if any)

Kamax Europe Gmbh
Talhof 1,88709 Hagnau am Bodensee, Germany

Hereby declares that: For the L3e-A1category vehicle:

0.1. Make (trade name of the manufacturer): KAMAX

e13*168/2013*01827*00
Société Nationale de Certification et d'Homologation

0.2. Type: Cub pro 125

0.2.1. Variant(s): 0

0.2.2. Version(s): 1, 2

0.2.3. Commercial name(s) (if available): SUPER CUB, SUPER CUB 125, T125, C125, DM125, CUB PRO, CUB PRO 125

0.3. Category, subcategory and sub-subcategory of vehicle: L3e-A1

Will not market interchangeable components which could enable propulsion unit performance to exceed levels applicable to the relevant (sub) category;

and that

The manufacturer-facilitated modifications of the following characteristics:

(a)	spark delivery of the ignition system if applicable;
(b)	fuel feed and delivery system;
(c)	air-intake system including air filter(s) (modification or removal);
(d)	propulsion battery configuration or electric power to the electric motor(s) if applicable;
(e)	drive-train;
(f)	and the control unit(s) that control(s) the propulsion unit performance of the powertrain.

Place: Hong kong, China
Date: February 20, 2023
Signature:
Name and position in the company: Mr. Wenbo HU/ Chairman

Kamax Group Limited
Unit 917A 9/F Tower A New Mandarin Plaza No 14 Science Museum Road Tsimshatsui Kowloon, Hong Kong

e13*168/2013*01827*00

Société Nationale de Certification et d'Homologation

ANTI-TAMPERING STATEMENT

Acc. to (EU) No 44/2014, annex II, No.2.8.3

We herewith declare, that any reprogrammable computer codes or operating parameter afford a level of protection at least as high as the provisions in ISO 15031-7:2001, provided that the security exchange is conducted using the communication protocols and standardized diagnostic connector prescribed in Appendix I to Annex XII.



Mr. Wenbo HU/ Chairman
Kamax Group Limited

Kamax Group Limited
Unit 917A 9/F Tower A New Mandarin Plaza No 14 Science Museum Road Tsimshatsui Kowloon, Hong Kong

Statement Concerning Authority Of Signature On COC Paper

We, Kamax Group Limited, declare that the undersigned, will be the authorized person to sign the COC paper of the motorcycle.

Type: Cub pro 125

e13*168/2013*01827*00
Société Nationale de Certification et d'Homologation

SPECIFICATION OF SIGNATURE OF COC:

NAME	DEPARTMENT/AGENT/COMPANY	TITLE	SIGNATURE
Mr. Wenbo HU	Kamax Group Limited	Chairman	

e13*168/2013*01827*00
Société Nationale de Certification et d'Homologation

Kamax Group Limited
Unit 917A 9/F Tower A New Mandarin Plaza No 14 Science Museum Road Tsimshatsui Kowloon, Hong Kong

EU CERTIFICATE OF CONFORMITY

The undersigned:
Mr. Wenbo HU/Chairman
Hereby certifies that the following complete vehicle:

0.1.	Make:	KAMAX
0.2.	Type:	Cub pro 125
0.2.1.	Variant:	0
0.2.2.	Version:	2
0.2.3.	Commercial name(s) (where appropriate):	SUPER CUB
0.3.	Category, subcategory and sub-subcategory of vehicle：	L3e-A1
0.4.	Name and address of the manufacturer:	Kamax Group Limited Unit 917A 9/F Tower A New Mandarin Plaza No 14 Science Museum Road Tsimshatsui Kowloon, Hong Kong
0.4.2.	Name and address of manufacturer's authorized representative：	Kamax Europe Gmbh Talhof 1,88709 Hagnau am Bodensee, Germany
0.5.1.	Location of the manufacturer's statutory plate(s)	L: x530, y21, z425
0.5.2.	Method of attachment of the manufacturer's statutory plate(s)：	Riveting
0.6.	Location of the Vehicle identification number:	R: x530, y21, z425
1.	Vehicle identification number:	R71XCJL1*********

Conforms in all respects to the type described in EU type-approval e13*168/2013*01827*00 issued on (MM DD, YYYY) and can be permanently registered in Member States having, having right/left -hand traffic and using metric/imperial units for the speedometer

Place Hong kong, China Date MM DD, YYYY

signature 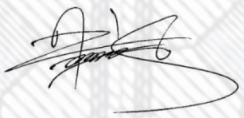

e13*168/2013*01827*00
Société Nationale de Certification et d'Homologation

Kamax Group Limited
Unit 917A 9/F Tower A New Mandarin Plaza No 14 Science Museum Road Tsimshatsui Kowloon, Hong Kong

VEHICLE CATEGORY L

General construction characteristics

1.3. Number of axles: 2 and wheels: 2
1.3.1. Axles with twinned wheels: n.a. 1.3.2. Powered axles: R
6.2.4. Advanced braking system: ABS

Main dimensions

2.2.1. Length: 1915 mm 2.2.2. Width: 720 mm
2.2.3. Height: 1010 mm
2.2.4. Wheelbase: 1245 mm 2.2.4.1 Wheelbase sidecar: n.a
2.2.5. Track width
2.2.5.1 Track width front: n.a. 2.2.5.2. Track width rear: n.a.
2.2.5.3 Track with sidecar: n.a. 2.2.10.6. Ground clearance between the axles:n.a.
2.2.15. wheelbase to ground clearance ratio:n.a
2.2.17. Seat height:n.a.

Masses

2.1.1. Mass in running order: 110 kg
2.1.2. Actual mass: 185 kg
2.1.3. Technically permissible maximum laden mass: 300 kg
2.1.3.1. Technically permissible maximum on front axle: 120 kg
2.1.3.2 Technically permissible maximum on rear axle: 180kg
2.1.3.3. Technically permissible maximum mass on sidecar axle: n.a.
2.1.7. Technically permissible maximum towable mass: Braked: n.a.; Unbraked: n.a.
2.1.7.1. Technically permissible maximum laden mass of the combination: n.a.
2.1.7.2. Technically permissible maximum mass at the coupling point: n.a.

Powertrain

3.1.1.1. manufacturer: Chongqing Yinxiang Motorcycle Group Co., Ltd.
3.1.1.2. Engine code: 153FMI
3.2.1.2. Working principle of the combustion engine: internal combustion engine (ICE)/positive ignition~~/compression ignition/external combustion engine (ECE)/turbine/compressed air~~
3.2.1.4.1. Number of cylinders: 1
3.2.1.4.2. arrangement of cylinders: S
3.2.1.5. Engine capacity: 125 cm^3
1.9. Maximum net power : 6.3 kW at 7500 min^{-1}
1.10. Ratio: maximum net power /mass of the vehicle in running order: 0.06 (kW/kg)
3.2.3.1. Fuel type: P or E5
3.2.3.2. Vehicle Fuel combination: mono-fuel/~~bi-fuel/flex-fuel~~
3.2.3.2.1. Maximum amount of bio-fuel acceptable in fuel: n.a.
3.1.2.1. Manufacturer: n.a.
3.1.2.2. Electric motor code: n.a.
3.3.3.4. ~~15~~/30 (1) minutes power: n.a.
3.1.3.1. Manufacturer: n.a. 3.1.3.2. Application code: n.a.
3.3.1. Electric vehicle configuration: ~~pure electric/hybrid electric/manpower electric~~
3.3.5.2. Category of hybrid electric vehicle: ~~off-vehicle charging/not off-vehicle charging~~
3.9.2. Maximum assistance factor: n.a.

Maximum speed

1.8. Maximum speed of vehicle: 85km/h
3.9.3. Maximum vehicle speed for which the electric motor gives assistance: n.a.

Drive-train and control

3.5.3.9. Transmission (type): M
3.5.4. Gear ratios: 1. 22.729 2. 14.091 3. 10.454 4. 8.391
3.5.4.1. Final drive ratio: 2.714
3.5.4.2. Overall gear ratio in highest gear: n.a

Installation of tyres

6.18.1.1. Tyre size designation:
Axle 1: 80/90-17 M/C 44S or 50P 230kpa 1.85×17
Optional: 70/90-17 M/C 38P or 38S 230kpa 1.4×17
Axle 2: 90/90-17 M/C 49S or 49P 250kpa 2.15×17
Optional: 80/90-17 M/C 50P or 44S 250kpa 1.6×17
Sidecar wheel: n.a.

Bodywork

6.20.2.1. Door configuration and number of doors : not applicable
6.16.1. Number of seating positions: 2
6.16.1.1. Location and arrangement: n.a.

Coupling devices

7.2.8. Type-approval number of coupling-device: not applicable

Environmental performance

4.0.1. Environmental step：Euro 5
4.0.6 Sound level measured according to：UN R41-04
4.0.6.1. Stationary: 78 dB(A) at engine speed: 3750 min^{-1}
4.0.6.2. Drive-by: 70 dB(A)
4.0.6.3. Limit value for L_{urban}: 74 dB(A)
3.2.15. Exhaust emissions measured according to:
Regulation (EU) No 134/2014 amend by 2018/295
3.2.15.1. Type I test: tailpipe emissions after cold start, including the deterioration factor, if applicable
CO : 285 mg/km THC: 61 mg/km NMHC: 55 mg/km
NO_X : 31 mg/km HC+ NO_X : --- mg/km PM: --- mg/km
3.2.15.2. Type II test: tailpipe emissions at (increased) idle and free acceleration:
HC: 12 ppm at normal idling speed and: 16 ppm at high idle speed
CO: 0.01% vol. at normal idling speed and:
0.02 % vol. at high idle speed
3.2.15.3. Smoke corrected absorption coefficient : --- m^{-1}

Energy efficiency

4.0.2. Fuel consumption: 2.7 l/~~kg~~/100km
4.0.3. CO_2 emissions: 46 g/km
4.0.4. Energy consumption: --- Wh/km
4.0.5. Electric range: --- km

Conversion of the performance of the vehicle

8.1. Vehicle appropriate for converting its performance level between subcategories (L3e/L4e)-A2 and (L3e/L4e)-A3 and vice versa：~~yes~~/no

Additional information

9.1.. Remarks : ---
9.2.. Exemptions : ---